# SHARP PARTS GUIDE

CODE:00ZMX7040P004

## デジタルフルカラー複合機
## Digital Full Color Multifunction System

# 改訂版
# Revised Edition

**MODEL** MX-6540FN
MX-7040N/6240N
MX-MF10,MX-LT10
MX-EB15,MX-KB13
MX-TU14,MX-TR14

このパーツガイドに掲載されている表示価格ランクは消費税抜きです。

CONTENTS


1 外装 1(Exteriors 1)
2 外装 2,MX-TU14(Exteriors 2,MX-TU14)
3 操作部 ,MX-KB13(Operation unit,MX-KB13)
4 DSPF 外装部 (DSPF Exteriors)
5 DSPF 原稿ﾄﾚｲ部 (DSPF Original tay)
6 DSPF 給紙ﾕﾆｯﾄ (DSPF Paper feed unit)
7 DSPF 分離ﾕﾆｯﾄ (DSPF Separation unit)
8 DSPF 上ﾄﾞｱﾕﾆｯﾄ (DSPF Upper door unit)
9 DSPF 上搬送ﾕﾆｯﾄ 1(DSPF Upper transport unit 1)
10 DSPF 下搬送ﾕﾆｯﾄ 1(DSPF Lower transport unit 1)
11 DSPF 下搬送ﾕﾆｯﾄ 2(DSPF Lower transport unit 2)
12 DSPF 縮小光学ﾕﾆｯﾄ (DSPF Reduction optical unit)
13 DSPF 排紙ﾕﾆｯﾄ (DSPF Delivery unit)
14 DSPF 駆動ﾕﾆｯﾄ (DSPF Drive unit)
15 DSPF ﾌﾚｰﾑ部 (DSPF Frame section)
16 DSPF ﾊｰﾈｽ部 (DSPF wiring unit)
17 原稿検知ﾕﾆｯﾄ (Document detect unit)
18 ｽｷｬﾅｰﾕﾆｯﾄ 1(Scanner unit 1)
19 ｽｷｬﾅｰﾕﾆｯﾄ 2(Scanner unit 2)
20 ﾗﾝﾌﾟ ﾕﾆｯﾄ (Lamp unit)
21 ﾀﾝﾃﾞﾑｶｾｯﾄ 1(Tandem cassette 1)
22 ﾀﾝﾃﾞﾑｶｾｯﾄ 2(Tandem cassette 2)
23 ﾀﾝﾃﾞﾑｶｾｯﾄ 3(Tandem cassette 3)
24 ﾀﾝﾃﾞﾑｶｾｯﾄ 4(Tandem cassette 4)
25 中継ﾊﾟｽﾕﾆｯﾄ (Interface pass unit)
26 給紙ﾄﾚｲ (Paper feed tray)
27 給紙ﾕﾆｯﾄ上 (Paper feed unit upper)
28 給紙ﾕﾆｯﾄ下 (Paper feed unit lower)
29 給紙ﾕﾆｯﾄ上搬送部 (Paper feed unit transport section)
30 右縦搬送ﾕﾆｯﾄ (Right vertical transport unit)
31 縦搬送ﾕﾆｯﾄ (Vertical transport unit)
32 手差し給紙ﾄﾚｲ (Manual paper feed tray)
33 手差し給紙ﾕﾆｯﾄ 1(Manual paper feed unit 1)
34 手差し給紙ﾕﾆｯﾄ 2(Manual paper feed unit 2)
35 LCC 搬送ﾕﾆｯﾄ (LCC transport unit)
36 PS 下ﾕﾆｯﾄ (PS lower unit)
37 PS ﾕﾆｯﾄ (PS unit)
38 LSU 部 (LSU section)
39 ﾄﾅｰ搬送部 1(Toner transport section 1)
40 ﾄﾅｰ搬送部 2(Toner transport section 2)
41 ﾄﾅｰ搬送部 3(Toner transport section 3)
42 DV ﾕﾆｯﾄ 1(DV unit 1)
43 DV ﾕﾆｯﾄ 2(DV unit 2)
44 ﾌﾟﾛｾｽﾕﾆｯﾄ 1(Process unit 1)
45 ﾌﾟﾛｾｽﾕﾆｯﾄ 2(Process unit 2)
46 MC ﾕﾆｯﾄ (MC unit)
47 1 次転写ｸﾘｰﾅｰﾕﾆｯﾄ (1st transfer cleaner unit)
48 1 次転写ﾕﾆｯﾄ 1(1st transfer unit 1)
49 1 次転写ﾕﾆｯﾄ 2(1st transfer unit 2)
50 1 次転写ﾕﾆｯﾄ 3(1st transfer unit 3)
51 PTC ﾕﾆｯﾄ (PTC unit)
52 ﾚｼﾞｽﾄｾﾝｻｰﾕﾆｯﾄ (Resist sensor unit)
53 2 次転写ﾕﾆｯﾄ 1(2nd transfer unit 1)
54 2 次転写ﾕﾆｯﾄ 2(2nd transfer unit 2)
55 廃ﾄﾅｰ搬送部 1(Waste toner transport section 1)
56 廃ﾄﾅｰ搬送部 2(Waste toner transport section 2)
57 定着部 1(Fusing unit 1)
58 定着部 2(Fusing unit 2)
59 定着部 3(Fusing unit 3)
60 定着部 4(Fusing unit 4)
61 定着部 5(Fusing unit 5)
62 右ﾄﾞｱﾕﾆｯﾄ 1(Right door unit 1)
63 右ﾄﾞｱﾕﾆｯﾄ 2(Right door unit 2)
64 右ﾄﾞｱﾕﾆｯﾄ 3(Right door unit 3)
65 右排紙 , MX-TR14(Right delivery,MX-TR14)
66 排紙ﾕﾆｯﾄ (Delivery unit)
67 多段駆動 (Multiple steps drive)
68 ﾀﾝﾃﾞﾑ駆動 1(Tandem drive 1)
69 ﾀﾝﾃﾞﾑ駆動 2(Tandem drive 2)
70 PS 駆動 (PS drive)
71 ﾒｲﾝ駆動ﾕﾆｯﾄ 1(Main drive unit 1)
72 ﾒｲﾝ駆動ﾕﾆｯﾄ 2(Main drive unit 2)
73 ﾒｲﾝ駆動ﾕﾆｯﾄ 3(Main drive unit 3)
74 ﾄﾅｰ搬送駆動 (Toner transport drive)
75 定着駆動 (Fusing drive)
76 ｺﾝﾄﾛｰﾙ基板部 1(Control PWB section 1)
77 ｺﾝﾄﾛｰﾙ基板部 2(Control PWB section 2)
78 ﾌﾚｰﾑ部 1(Frame section 1)
79 ﾌﾚｰﾑ部 2(Frame section 2)
80 前ﾌﾚｰﾑ部 (Front frame section)
81 後ﾌﾚｰﾑ部 (Rear frame section)
82 電源部 (Power supply section)
83 梱包及び付属品(Packing material&Accessories)
84 梱包及び付属品(Packing material&Accessories)[MX-KB13]
85 ﾐﾗｰﾘﾝｸﾞ ｷｯﾄ (Mirroring kit)[MX-EB15]
86 梱包及び付属品(Packing material&Accessories)[MX-TU14]
87 長尺紙ﾄﾚｲ (Long paper feeding tray)[MX-LT10]



本書はサービス活動用に作成した資料です。
一部内容が製品の改良・改善等により予告なしに変わることがあります。



SHARP CORPORATION



This document has been published to be used for after sales service only.
The contents are subject to change without notice.

〈修正パーツガイド活用時の注意〉

・部品の互換性は下表の通り、No1 ～ 6 で表現しております。

〈互換性〉

| | |
|---|---|
| 1 | 新・旧の互換性有り。 |
| 2 | 新の代わりに旧は使用可。<br>旧の代わりに新は使用不可。 |
| 3 | 新の代わりに旧は使用不可。<br>旧の代わりに新は使用可。 |
| 4 | 新・旧の互換性無。 |
| 5 | 旧（a, b, c…） どうし一対、又は<br>新（a, b, c…） どうし一対で、　互換性有。 |
| 6 | その他 |

・部品の追加・変更・廃止・員数の増減等の変更は下表のマークで表現しております。

〈変更区分〉

| | |
|---|---|
| 新規追加 | N |
| 変　　更 | ↻ |
| 廃　　止 | ⊠ |
| 員数増・その他 | ☆ |
| 員数減 | ★ |
| パーツ修正 | C |

・変更時期のランニングチェンジは、R/C として記載しています。

〈変更時期〉

| | |
|---|---|
| R / C | ランニングチェンジ |

〈Note for use of the revised Parts Guide〉

・Interchangeability of parts is expressed by No1~6 as shown in the table below.

<Interchangeability>

| | |
|---|---|
| 1 | Interchangeable. |
| 2 | Current type can be used in place of new type.<br>New type cannot be used in place of current type. |
| 3 | Current type cannot be used in place of new type.<br>New type can be used in place of current type. |
| 4 | Not interchangeable. |
| 5 | Interchangeable if replaced with same types of releted parts in use. |
| 6 | Others. |

・New & Addition, Change, Abolition, and Quantity change are expressed with the marks shown in the table below.

<Change of Division>

| | |
|---|---|
| New & Addition | N |
| Change | ↻ |
| Abolition | ⊠ |
| Q'uantity (increase) /Others | ☆ |
| Q'uantity (decrease) | ★ |
| Correction | C |

・Running Change of Effective Time is expressed as R/C.

<Effective Time>

| | |
|---|---|
| R / C | Running Change |

## 仕向地インデックス (Destination index)

ディスクリプションやマトリックスに記載している地域名について、各々の国がどの地域に該当するかは、下記表を参照する事。
Regarding the name of regions listed on Description and matrix, refer to the table below to figure out which country belongs to which region.

| Classification by the large area ( 大分類 ) | Classification by the small area ( 小分類 ) | Country( 国 ) | Classification by the voltage | Classification by the Paper standard |
|---|---|---|---|---|
| Japan( 日本 ) | Japan( 日本 ) | Japan( 日本 ) | 100V | AB series |
| Americas | Americas 1 | U.S.A. / Canada / Mexico / LAG(120V) | 208-240V | Inch series |
| Europe | Europe 1 | Germany / Spain / France / Italy / The Netherlands / Switzerland | 220-240V | AB series |
| | | U.kingdom | 220-240V | AB series |
| | | Sweden / Denmark / Finland / Norway | 220-240V | AB series |
| | Europe 2 | Greek / Cyprus / Turkish / Polish / Hungarian / Czech / Slovak | 220-240V | AB series |
| | | Romania / Latvia / Portugal | 220-240V | AB series |
| | Europe 3 | Russia | 220-240V | AB series |
| Australia | Australia | Australia / New Zealand | 220-240V | AB series |
| Asia | Asia 1 | Hong Kong / Thailand /India / Koria | 220-240V | AB series |
| | Asia 2 | Singapore / Malaysia / Vietnam | 220-240V | AB series |
| | Asia 3 | Philippines | 220-240V | Inch series |
| | Asia 4 | Yemen / Saudi Arabia / Bahrain / Kuwait / UAE / Oman / Qatar | 220-240V | AB series |
| | Asia 5 | Egypt / Jordan | 220-240V | AB series |
| | Asia 6 | Tunisia / Morocco | 220-240V | AB series |
| | Asia 7 | Lebanon / Pakistan | 220-240V | AB series |
| | Asia 8 | Israel | 220-240V | AB series |
| Class B | Class B | South Africa | 220-240V | AB series |
| | | Taiwan | 110V | AB series |

## 補修部品のランク付

市場における補修部品の在庫管理が、適正に運営出来る手助けとなることを、目的とします。

Aランク ： メンテナンスパーツ、メンテナンスパーツには入っていないがメンテナンスパーツに近い消耗パーツ。
Bランク ： 性能・機能パーツ（センサー、クラッチ等の電気パーツ）、消耗パーツ。
Eランク ： 基板含むユニットパーツ。
Dランク ： 整備パーツ（外装、パッキング、同梱パーツ）。
Cランク ： 上記ランク以外のパーツ（基板の子部品を除いたもの）。

## DEFINITION

Rank A : Maintenance parts, and consumable parts which are not included in but closely related to maintenance parts
Rank B : Performance/function parts (sensors, clutches, and other electrical parts), consumable parts
Rank E : Unit parts including PWB
Rank D : Preparation parts (External fitting, packing, parts packed together)
Rank C : Parts other than the above (excluding sub components of PWB)

安全性・信頼性確保のため部品は、必ず正規のものをご使用下さい。
⚠印の商品は、安全上重要な部品です。交換をする時は、安全及び性能維持のため必ず指定の部品をご使用下さい。
Because parts marked with "⚠" is indispensable for the machine safety maintenance and operation, it must be replaced with the parts specific to the product specification.

○ 当モデルのサービス資料には、この資料以外にサービスマニュアル（回路図含む）があります。合わせてご利用下さい。
○ Other than this Parts Guide, please refer to documents Service Manual(including Circuit Diagram)of this model.
○ Please use the 13 digit code described in the right hand corner of front cover of the document, when you place an order.
○ For U.S. only-Use order codes provided in advertising literature. Do not order from parts department.

# 1 外装部 1(Exteriors )

| NO. | PARTS CODE | Inter-change | PRICE RANK Ex. | PRICE RANK Ja. | NEW MARK | PART RANK | DESCRIPTION | | TR No. | Effective time |
|---|---|---|---|---|---|---|---|---|---|---|
| 1 | XBTS740P06000 | | AA | DD | | C | Screw(4×6) | ﾋﾞｽ | | |
| 2 | LFiX-0692FCAZ | | AH | DX | N | C | Glass fixture left VR | ｶﾞﾗｽ押え左 VR | | |
| 3 | PGLSP0109FCZ1 | | BB | GD | | D | SPF slit glass | SPF ｽﾘｯﾄｶﾞﾗｽ | | |
| 4 | PSHEZ5366FCZZ | | AB | DJ | | C | White mylar | 白ﾏｲﾗｰ | | |
| 5 | PSHEZ5971FCZZ | | AA | DJ | | C | SPF glass sheet | SPF ｶﾞﾗｽｼｰﾄ | | |
| 6 | PSHEZ5368FCZ1 | | AD | DJ | | C | SPF glass fixing sheet L(Long) | SPF ｶﾞﾗｽ固定ｼｰﾄ左 | | |
| 7 | PSHEZ5367FCZ1 | | AC | DJ | | C | SPF glass fixing sheet R(Short) | SPF ｶﾞﾗｽ固定ｼｰﾄ右 | | |
| 8 | PGUMS0283FCZ2 | | AA | DJ | | C | Table glass gum | ﾃｰﾌﾞﾙｶﾞﾗｽｺﾞﾑ | | |
| 9 | LX-BZ0776FCPZ | | AG | DD | | C | Step screw R | 段ﾋﾞｽR | | |
| 10 | LFiX-0596FCBZ | | AH | DX | N | C | Glass fixture right | ｶﾞﾗｽ押え右 | | |
| 11 | XHBS740P08000 | | AA | DD | | C | Screw(4×8) | ﾋﾞｽ | | |
| 12 | LX-BZ1129FCPZ | | AG | DX | | C | SPF step screw R | SPF 段ﾋﾞｽR | | |
| 13 | GCAB-1440FCAZ | | AV | FG | N | D | Upper cabinet rear | 上ｷｬﾋﾞ後 | | |
| | GCAB-1440FCA1 | 3 | AV | FG | N | D | Upper cabinet rear | 上ｷｬﾋﾞ後 | | Mar/12 |
| 14 | XBTSC50P16000 | | AA | DD | | C | Screw(5×16) | ﾋﾞｽ | | |
| 15 | DUNT-8060DS13 | | BB | GD | | E | Table glass(Refer to Matrix) | ﾃｰﾌﾞﾙｶﾞﾗｽ | | |
| | DUNT-8060DS14 | | BB | GD | N | E | Table glass(Refer to Matrix) | ﾃｰﾌﾞﾙｶﾞﾗｽ | | |
| | DUNT-8060DS16 | - | | | N | E | Table glass(Refer to Matrix) | ﾃｰﾌﾞﾙｶﾞﾗｽ | | 1st lot |
| 16 | PFTA-0154FCAZ | | AK | EB | N | D | Upper cabinet right cover | 上ｷｬﾋﾞ右用ﾌﾀ | | |
| 17 | GCOV-0361FCZZ | | AY | FQ | N | D | Top cabinet rear cover | 上ｷｬﾋﾞ後ｶﾊﾞｰ | | |
| 18 | GCAB-1438FCZZ | | BA | FX | N | D | Upper cabinet right upper | 上ｷｬﾋﾞ右上 | | |
| 19 | LBNDJ0013FCZ1 | | AE | DJ | | C | Band | ﾊﾞﾝﾄﾞ | | |
| 20 | CCAB-1461FC01 | | AV | FG | | D | Upper cabinet front R(Refer to Matrix) | 上ｷｬﾋﾞ前 R | | |
| | GCAB-1461FCZZ | | AT | EZ | N | D | Upper cabinet front R(Refer to Matrix) | 上ｷｬﾋﾞ前 R | | |
| 21 | XBBS730P06000 | | AC | DD | | C | Screw(3×6) | ﾋﾞｽ | | |
| 22 | CPWBN1960FCE2 | | AW | FG | | E | USB CN PWB(Refer to Matrix) | USB CN 基板 | | |
| | CPWBN1960FCE3 | | AT | EZ | | E | USB CN PWB(Refer to Matrix) | USB CN 基板 | | |
| 23 | XEBS730P08000 | | AC | DD | | C | Screw(3×8) | ﾋﾞｽ | | |
| 24 | PLNS-0141FCZZ | | AY | FQ | | B | FAX announcement lens [Japan(日本)] | FAX お知らせﾚﾝｽﾞ | | |
| 25 | LPLTM8537FCZZ | | AE | DJ | N | C | Top cabinet joint plate | 上ｷｬﾋﾞ連結板 | | |
| 26 | PGSK-0063FCPZ | | AM | EG | | C | Gasket(L=78) | ｶﾞｽｹｯﾄ | | |
| 27 | GCAB-1435FCAZ | | AX | FG | N | D | Upper cabinet front | 上ｷｬﾋﾞ前 | | |
| 28 | GCOV-0368FCAZ | | AV | FG | N | D | Upper cabinet front lower cover | 上ｷｬﾋﾞ前下ｶﾊﾞｰ | | |
| 29 | LPLTM8306FCZ1 | | AX | FG | N | C | Panel support plate | ﾊﾟﾈﾙ保持ﾌﾟﾚｰﾄ | | |
| | LPLTM8306FCZ2 | | AW | FG | N | C | Panel support plate | ﾊﾟﾈﾙ保持ﾌﾟﾚｰﾄ | | May/12 R/C |
| 30 | LHLDW1894FCPZ | | AC | DJ | | C | Wire saddle(RLWC3SV0) | ﾜｲﾔｰｻﾄﾞﾙ | | 1st lot |
| | LHLDW2376FCPZ | 1 | AC | DD | | C | Wire saddle(GRBWS-0911E-V0) | ﾜｲﾔｰｻﾄﾞﾙ | | Jan/13 R/C |
| 31 | RCORF0021QSZZ | | AK | DX | | C | Core | ｺｱ | | |
| 32 | DHAi-5059FCPZ | | BV | RB | N | C | Key interface harness | ｷｰ中継ﾊｰﾈｽ | | |
| 33 | XBBS840P08000 | | AB | DD | | C | Screw(4×8) | ﾋﾞｽ | | |
| 34 | QEARP0288FCZZ | | AC | DJ | | C | Earth terminal base | ｱｰｽ端子台 | | |
| 35 | TLABH5411FCZZ | | AE | DJ | | D | Copy prohibition caution label(Refer to Matrix) | ｺﾋﾟｰ禁止注意ﾗﾍﾞﾙ | | |
| | TLABH5645FCZZ | | AF | DS | N | D | Copy prohibition caution label(Refer to Matrix) | ｺﾋﾟｰ禁止注意ﾗﾍﾞﾙ | | |
| 36 | GCAB-1437FCAZ | | AV | FG | N | D | Upper cabinet left upper | 上ｷｬﾋﾞ左上 | | |
| 501 | DUNT-8388FC11 | | AV | FG | N | E | SPF glass unit | SPF ｶﾞﾗｽﾕﾆｯﾄ | | |

## 1 外装部 1(Exteriors )

## Matrix

| No.15 | ﾃｰﾌﾞﾙｶﾞﾗｽ (Table glass) | | | | | | | | | | | | | |
|---|---|---|---|---|---|---|---|---|---|---|---|---|---|---|
| PARTS CODE | MX-7040N MX-6240N | | MX-6540FN | | | | | | | | | | | |
| | Americas, Europe, Australia, Asia, South Africa | Taiwan | Japan( 日本 ) | | | | | | | | | | | |
| DUNT-8060DS13 | | | 1st lot | | | | | | | | | | | |
| DUNT-8060DS14 | 1st lot | | | | | | | | | | | | | |
| DUNT-8060DS16 | | 1st lot | | | | | | | | | | | | |

| No.20 | 上ｷｬﾋﾞ前 R(Upper cabinet front R) | | | | | | | | | | | | | |
|---|---|---|---|---|---|---|---|---|---|---|---|---|---|---|
| PARTS CODE | MX-7040N MX-6240N | MX-6540FN | | | | | | | | | | | | |
| CCAB-1461FC01 | | 1st lot | | | | | | | | | | | | |
| GCAB-1461FCZZ | 1st lot | | | | | | | | | | | | | |

| No.22 | USB CN 基板 (USB CN PWB) | | | | | | | | | | | | | |
|---|---|---|---|---|---|---|---|---|---|---|---|---|---|---|
| PARTS CODE | MX-7040N MX-6240N | MX-6540FN | | | | | | | | | | | | |
| CPWBN1960FCE2 | | 1st lot | | | | | | | | | | | | |
| CPWBN1960FCE3 | 1st lot | | | | | | | | | | | | | |

| No.35 | ｺﾋﾟｰ禁止注意ﾗﾍﾞﾙ (Copy prohibition caution label) | | | | | | | | | | | | | |
|---|---|---|---|---|---|---|---|---|---|---|---|---|---|---|
| PARTS CODE | MX-7040N MX-6240N | MX-6540FN | | | | | | | | | | | | |
| TLABH5411FCZZ | | 1st lot | | | | | | | | | | | | |
| TLABH5645FCZZ | 1st lot | | | | | | | | | | | | | |

## 1 外装部 1(Exteriors )

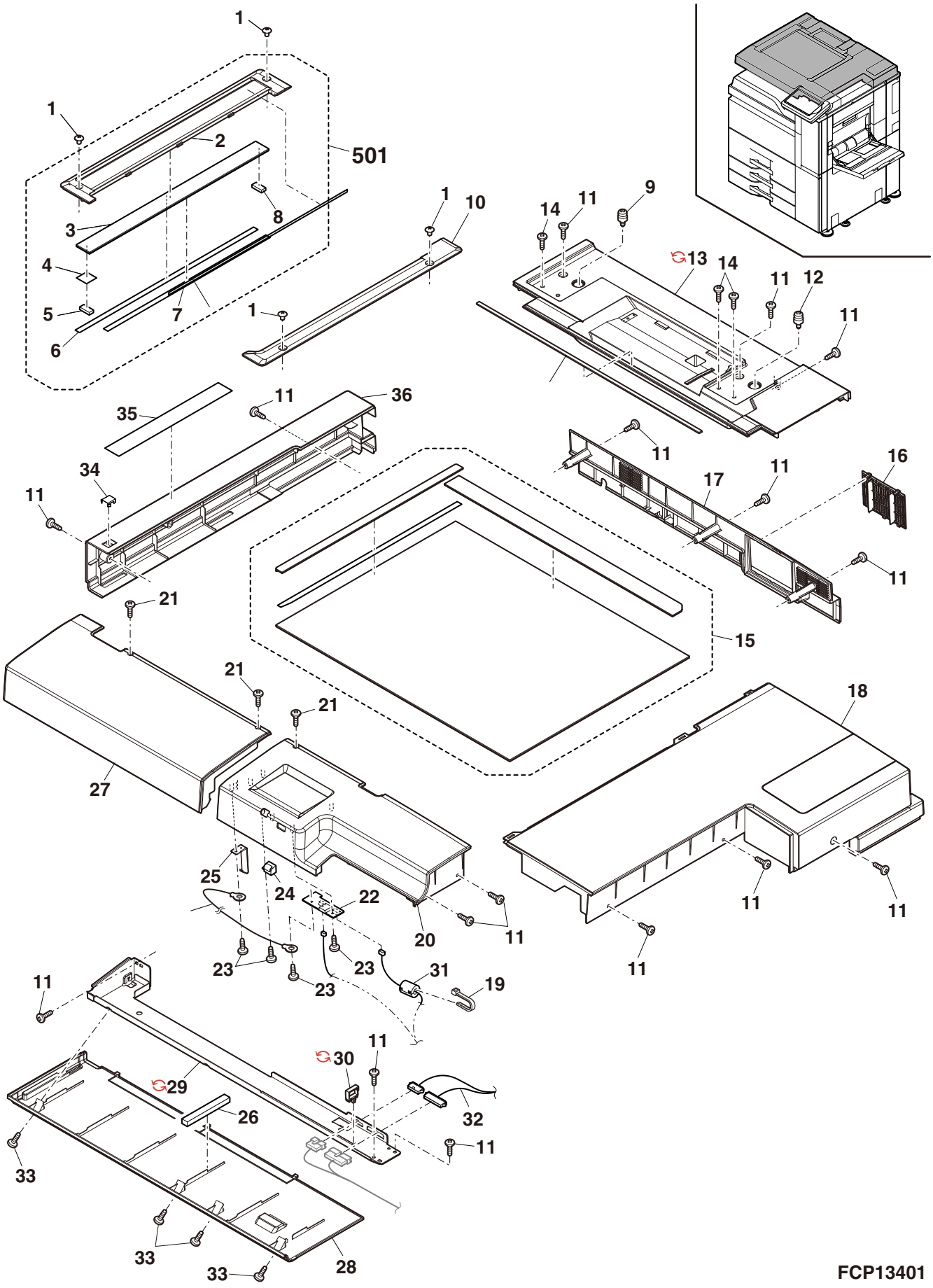

## 2 外装部 2,MX-TU14(Exteriors 2,MX-TU14)

| NO. | PARTS CODE | Inter-change | PRICE RANK Ex. | PRICE RANK Ja. | NEW MARK | PART RANK | DESCRIPTION | | TR No. | Effective time |
|---|---|---|---|---|---|---|---|---|---|---|
| 1 | XHBS740P08000 | | AA | DD | | C | Screw(4×8) | ﾋﾞｽ | | |
| 2 | GFTA-0032FCZZ | | AG | DX | N | D | PCI joint lid | PCI 連結蓋 | | |
| 3 | GCOV-0369FCZZ | | AN | EG | N | D | Ozone filter cover | ｵｿﾞﾝﾌｨﾙﾀｰｶﾊﾞｰ | | |
| 4 | GFTA-0026FCZ1 | | AF | DS | | D | Rear cabinet lid | 後ｷｬﾋﾞ用蓋 | | |
| 5 | GCAB-1450FCZZ | | BQ | LP | N | D | Rear cabinet | 後ｷｬﾋﾞ | | |
| | GCAB-1450FCZ1 | 3 | BP | LP | N | D | Rear cabinet | 後ｷｬﾋﾞ | | Mar/12 |
| 6 | PSEL-1171FCZZ | | AC | DD | N | D | Rear cabinet label | 後ｷｬﾋﾞﾗﾍﾞﾙ | | |
| 7 | GCAB-1448FCA1 | | AT | EZ | N | D | Right cabinet rear upper(Refer to Matrix) | 右ｷｬﾋﾞ後上 | | |
| | GCAB-1448FCAZ | | AT | EZ | N | D | Right cabinet rear upper(Refer to Matrix) | 右ｷｬﾋﾞ後上 | | |
| 8 | GCAB-1449FCAZ | | AT | EZ | N | D | Right cabinet rear lower | 右ｷｬﾋﾞ後下 | | |
| 9 | PFTA-0135FCA1 | | AD | DJ | | D | Connector cover B | ｺﾈｸﾀｰ蓋 B | | |
| 10 | XHBS730P06000 | | AC | DD | | C | Screw(3×6) | ﾋﾞｽ | | |
| 11 | MARMP0494FCZZ | | AD | DJ | N | C | Right lower door detect actuator | 右下ﾄﾞｱ検知ｱｸﾁｭｴｰﾀｰ | | |
| 12 | MSPRT3195FCZZ | | AC | DJ | | C | ADU gate return spring | ADU ｹﾞｰﾄ復帰ｽﾌﾟﾘﾝｸﾞ | | |
| 13 | GCAB-1447FCAZ | | BB | GD | N | D | Right cabinet lower | 右ｷｬﾋﾞ下 | | |
| 14 | PCOVP1998FCZZ | | AG | DS | | C | LCD cover R | LCD ｶﾊﾞｰR | | |
| 15 | LSTPP0011QSZZ | | AC | DJ | | C | Resin ring(E3) | 樹脂ﾘﾝｸﾞ | | |
| 16 | PCOVP2470FCZ1 | | AQ | EQ | N | D | Right lower door cover | 右下ﾄﾞｱｶﾊﾞｰ | | 1st lot |
| | PCOVP2470FCZ2 | 1 | AQ | EQ | N | D | Right lower door cover | 右下ﾄﾞｱｶﾊﾞｰ | | Nov/12 R/C |
| 17 | XEBS740P10000 | | AA | DD | | C | Screw(4×10) | ﾋﾞｽ | | |
| 18 | GCAB-1458FCA1 | | AP | EQ | | D | Right cabinet lower front | 右ｷｬﾋﾞ下前 | | 1st lot |
| 19 | PTME-0359FCZZ | | AG | DX | N | C | Right lower door fixing pawl | 右下ﾄﾞｱ固定爪 | | |
| 20 | JHNDP0218FCZZ | | AH | DX | N | C | Right lower door handle | 右下ﾄﾞｱ取手 | | |
| 21 | CPLTM6871FC01 | | AG | DS | | C | Right door cabinet fulcrum plate | 右ﾄﾞｱｷｬﾋﾞ支点板 | | |
| 22 | LPLTM8340FCZZ | | AH | DX | N | C | Right lower door fixing plate | 右下ﾄﾞｱ取付板 | | |
| 23 | LPLTM5027FCZZ | | AC | DJ | | C | Magnet catch plate | ﾏｸﾞﾈｯﾄｷｬｯﾁﾌﾟﾚｰﾄ | | |
| 24 | GCAB-1425FCZ1 | | BA | FX | N | D | Right lower door cabinet | 右下ﾄﾞｱｷｬﾋﾞ | | |
| 25 | GCAB-1460FCAZ | | AF | DS | N | D | Decoration cover R | 化粧ｶﾊﾞｰR | | 1st lot |
| 26 | GCAB-1443FCZZ | 5 | AT | EZ | N | D | Front cabinet upper | 前ｷｬﾋﾞ上 | | Jun/12 |
| 27 | GCAB-1442FCAZ | | AP | EQ | N | D | Front cabinet right | 前ｷｬﾋﾞ右 | | |
| 28 | GCOV-0362FCAZ | | AT | EZ | N | D | Adjuster cover | ｱｼﾞｬｽﾀｰｶﾊﾞｰ | | |
| 29 | LBNDZ0106FCZZ | | AZ | FQ | N | C | Front cabinet band | 前ｷｬﾋﾞﾊﾞﾝﾄﾞ | | |
| 30 | GCAB-1441FCZZ | | BB | GD | N | D | Front cabinet | 前ｷｬﾋﾞ | | |
| 31 | CBDGD0069FC11 | | AW | FG | N | C | Model name plate(Refer to Matrix) | 機種名ﾌﾟﾚｰﾄ | | |
| | CBDGD0069FC13 | | AW | FG | N | C | Model name plate(Refer to Matrix) | 機種名ﾌﾟﾚｰﾄ | | |
| | CBDGD0069FC14 | | AW | FG | N | C | Model name plate(Refer to Matrix) | 機種名ﾌﾟﾚｰﾄ | | |
| 32 | HBDGD0059FCZZ | | AP | EQ | | D | Front cabinet badge | 前ｷｬﾋﾞﾊﾞｯｼﾞ | | |
| 33 | PSHEZ6436FCZ1 | | AX | FG | N | C | Decoration sheet | 化粧ｼｰﾄ | | 1st lot |
| 34 | MHNG-0220FCZZ | | AG | DX | | C | Front cabinet hinge | 前ｷｬﾋﾞﾋﾝｼﾞ | | |
| 35 | PBARP0054FCZZ | | AK | DX | N | C | LSU cleaning bar | LSU ｸﾘｰﾆﾝｸﾞ棒 | | |
| 36 | CDAiU0699DS72 | | AH | DX | | B | LSU cleaner | LSU ｸﾘｰﾅｰ | | |
| 37 | GCAB-1459FCAZ | | AF | DS | N | D | Decoration cover L | 化粧ｶﾊﾞｰL | | 1st lot |
| 38 | LSTPP0016QSZZ | | AC | DJ | | C | Resin ring(E5) | [MX-TU14] 樹脂ﾘﾝｸﾞ | | |
| 39 | GCAB-1457FCZZ | | AN | EG | | D | Front cabinet upper left | [MX-TU14] 前ｷｬﾋﾞ上左 | | |
| 40 | GCOV-0364FCAZ | | AS | EQ | N | D | Delivery tray front cover lower | [MX-TU14] 排紙ﾄﾚｲ前ｶﾊﾞｰ下 | | |
| 41 | GCOV-0363FCAZ | | AV | FG | N | D | Delivery tray front cover upper | [MX-TU14] 排紙ﾄﾚｲ前ｶﾊﾞｰ上 | | |
| 42 | LFiX-0627FCZ1 | | AD | DJ | | C | Paper fixing arm | [MX-TU14] 用紙押えｱｰﾑ | | |
| 43 | MARMP0480FCZ1 | | AC | DJ | | C | Full detect actuator | [MX-TU14] 満杯ｱｸﾁｪｰﾀｰ | | |
| 44 | GCAB-1454FCAZ | | AW | FG | N | D | Delivery tray rear joint cabinet | [MX-TU14] 排紙ﾄﾚｲ後連結ｷｬﾋﾞ | | |
| 45 | MHNG-0231FCAZ | | AQ | EQ | | C | Delivery tray hinge | [MX-TU14] 排紙ﾄﾚｲﾋﾝｼﾞ | | |
| 46 | PMAGT0146FCZZ | | AF | DS | | C | Magnet catch | [MX-TU14] ﾏｸﾞﾈｯﾄｷｬｯﾁ | | |
| 47 | GCAB-1452FCZZ | | BG | GT | | D | Delivery tray cabinet | [MX-TU14] 排紙ﾄﾚｲｷｬﾋﾞ | | |
| 48 | XEBS730P08000 | | AC | DD | | C | Screw(3×8) | ﾋﾞｽ | | |
| 49 | GCAB-1453FCAZ | | AT | EZ | N | D | Delivery tray cabinet left | [MX-TU14] 排紙ﾄﾚｲｷｬﾋﾞ左 | | |
| 50 | GCAB-1445FCAZ | | AZ | FX | N | D | Left cabinet lower | 左ｷｬﾋﾞ下 | | |
| 51 | GCAB-1444FCAZ | | BD | GJ | N | D | Left cabinet upper | 左ｷｬﾋﾞ上 | | |
| 52 | TLABZ5112FCZZ | | AC | DJ | | D | Heater switch label | [Japan( 日本 )] ﾋｰﾀｰｽｲｯﾁﾗﾍﾞﾙ | | |
| 53 | GCAB-1446FCAZ | | AV | FG | N | D | Left cabinet rear | 左ｷｬﾋﾞ後 | | |
| 54 | TLABH5211FCZZ | | AD | DJ | | D | Main body PW caution label | 本体 PW 注意ｲﾗﾍﾞﾙ | | |
| 55 | TCAUA1080FCZZ | | AD | DJ | | D | Service caution label | [MX-7040N,MX-6245N] ｻｰﾋﾞｽ注意ﾗﾍﾞﾙ | | |
| 56 | TLABH5200FCZZ | | AB | DJ | | D | Plug caution label | [Japan( 日本 )] ﾌﾟﾗｸﾞｺｰｼｮﾝﾗﾍﾞﾙ | | |
| 57 | GCOV-0380FCZZ | 5 | AN | EG | N | D | Front cabinet upper cover PO | (With No.59) 前ｷｬﾋﾞ上ｶﾊﾞｰPO | | Jun/12 |
| 58 | LHLDW2201FCPZ | | AD | DJ | N | C | Saddle(WSLT-03-2-19) | ｻﾄﾞﾙ | | 1st lot |
| 59 | GCAB-1504FCZZ | 5 | AS | EQ | N | D | Front cabinet upper | (With No.57) 前ｷｬﾋﾞ上 | | Jun/12 |

## 2 外装部 2,MX-TU14(Exteriors 2,MX-TU14)

## Matrix

| No.7 | 右ｷｬﾋﾞ後上 (Right cabinet rear upper) | | | | | | | | | | | | | | |
|---|---|---|---|---|---|---|---|---|---|---|---|---|---|---|---|
| PARTS CODE | MX-7040N MX-6240N | MX-6540FN | | | | | | | | | | | | | |
| GCAB-1448FCA1 | | 1st lot | | | | | | | | | | | | | |
| GCAB-1448FCAZ | 1st lot | | | | | | | | | | | | | | |

| No.31 | 機種名ﾌﾟﾚｰﾄ (Model name plate) | | | | | | | | | | | | | | |
|---|---|---|---|---|---|---|---|---|---|---|---|---|---|---|---|
| PARTS CODE | MX-7040N | MX-6240N | MX-6540FN | | | | | | | | | | | | |
| CBDGD0069FC11 | | | 1st lot | | | | | | | | | | | | |
| CBDGD0069FC13 | | 1st lot | | | | | | | | | | | | | |
| CBDGD0069FC14 | 1st lot | | | | | | | | | | | | | | |

## 2 外装部 2,MX-TU14(Exteriors 2,MX-TU14)

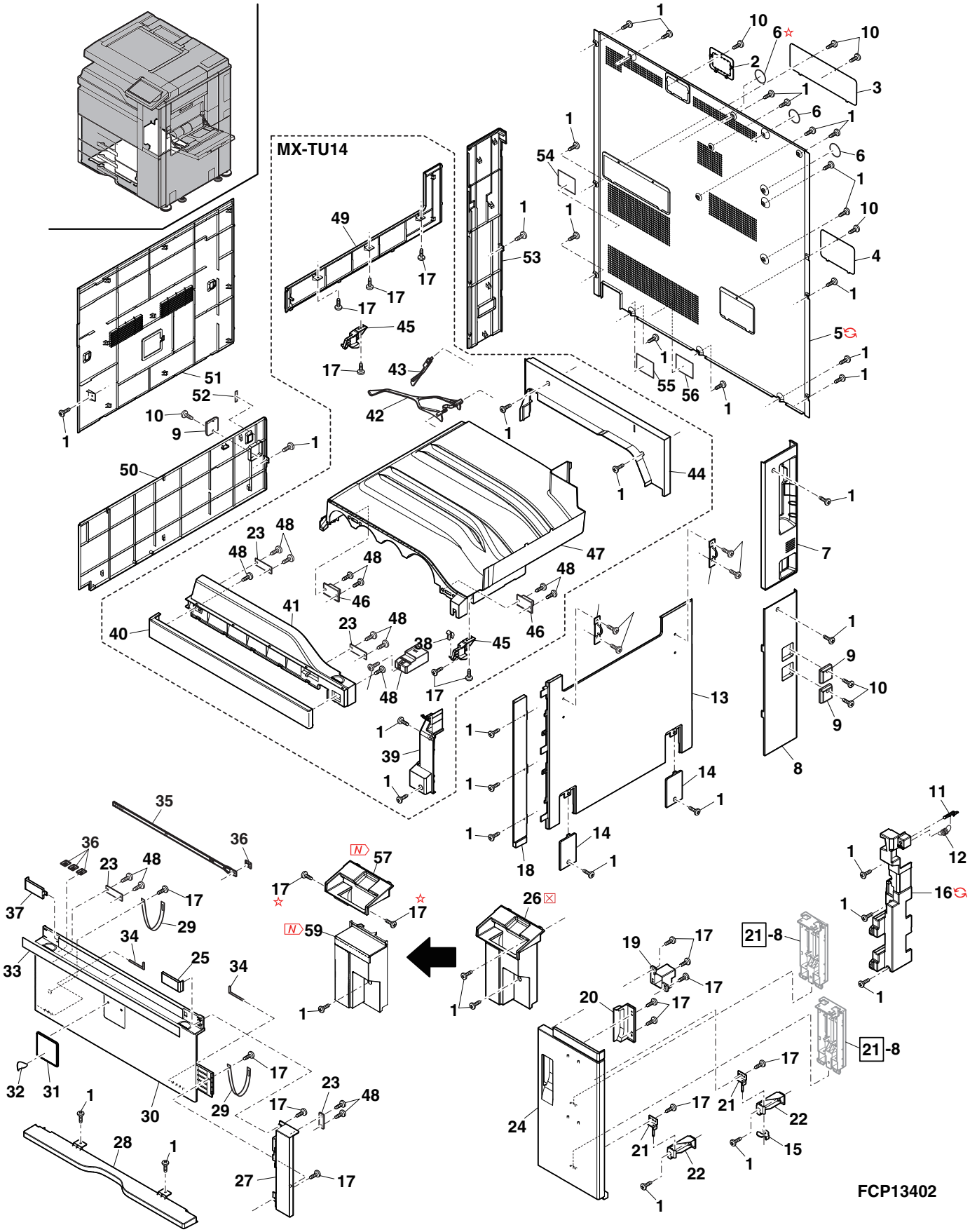

## 3 操作部 ,MX-KB13(Operation unit,MX-KB13)

| NO. | PARTS CODE | Inter-change | PRICE RANK Ex. | PRICE RANK Ja. | NEW MARK | PART RANK | DESCRIPTION | | TR No. | Effective time |
|---|---|---|---|---|---|---|---|---|---|---|
| 1 | CPNLC0316FC05 | | BA | FX | N | B | Operation panel B(Refer to Matrix) | 操作ﾊﾟﾈﾙ B | | 1st lot |
| | CPNLC0316FC06 | | BA | FX | N | B | Operation panel B(Refer to Matrix) | 操作ﾊﾟﾈﾙ B | | 1st lot |
| 2 | PSHEP6432FCZZ | | AD | DJ | N | C | Tilt indication sheet | ﾁﾙﾄ表示ｼｰﾄ | | |
| 3 | CPWBF2036FCE1 | | AN | EG | N | E | KEY PWB 2 | KEY 基板 2 | | |
| 4 | XEBS730P08000 | | AC | DD | | C | Screw(3×8) | ﾋﾞｽ | | |
| 5 | HPNLH0314FCPZ | | BN | LE | | D | Touch panel(10inch) | ﾀｯﾁﾊﾟﾈﾙ | | |
| 6 | PSHEP5508FCZZ | | AC | DJ | | C | Touch panel fixing sheet | ﾀｯﾁﾊﾟﾈﾙ取付ｼｰﾄ | | |
| 7 | CFiLW0366FC01 | | AV | FG | N | D | Home key filter | ﾎｰﾑｷｰﾌｨﾙﾀｰ | | |
| 8 | PLNS-0138FCZZ | | AE | DJ | N | B | PS key lens | 電源ｷｰﾚﾝｽﾞ | | |
| 9 | CBTN-0312FC01 | | AK | DX | N | C | Power supply key | 電源ｷｰ | | |
| 10 | CBTN-0313FC01 | | AL | EB | N | C | Power save switch | 節電ｷｰ | | |
| 11 | JBTN-0314FCZZ | | AE | DJ | N | C | Home key | ﾎｰﾑｷｰ | | |
| 12 | CPWBF2035FCE1 | | AW | FG | N | E | KEY PWB 1 | KEY 基板 1 | | |
| 13 | LHLDZ2324FCAZ | | AK | EB | N | C | LCD holder A | LCD ﾎﾙﾀﾞｰ A | | |
| 14 | VVLN101LG11-1 | | BV | RB | | B | LCD(10inch) | LCD | | |
| 15 | DHAi-4896FCPZ | | BV | NU | N | C | Operation panel interface harness | 操作ﾊﾟﾈﾙ中継ﾊｰﾈｽ | | |
| 16 | PMLT-1940FCZZ | | AC | DD | | C | LCD protect molt | LCD 保護ﾓﾙﾄ | | |
| 17 | LHLDZ2325FCAZ | | AN | EG | N | C | LCD holder B | LCD ﾎﾙﾀﾞｰ B | | |
| 18 | LHLDW2037FCPZ | | AC | DJ | | C | Clamp(RMS-1V0) | ｸﾗﾝﾌﾟ | | |
| 19 | LPLTM8398FCZZ | | AR | EQ | | C | Keyboard fixing plate [Japan( 日本 ),Europe,Australia,Asia,Class B] | ｷｰﾎﾞｰﾄﾞ取付板 | | |
| 20 | LDAiU0874FCAZ | | AT | EZ | N | D | Operation base plate(Refer to Matrix) | 操作台板 | | |
| | LDAiU0873FCAZ | | AT | EZ | N | D | Operation base plate(Refer to Matrix) | 操作台板 | | |
| 21 | Ki-OK0009FCPZ | | BL | HL | | E | Keyboard(Refer to Matrix) | ｷｰﾎﾞｰﾄﾞ | | |
| | Ki-OK0010FCPZ | | BL | HG | | E | Keyboard(Refer to Matrix) | ｷｰﾎﾞｰﾄﾞ | | |
| | Ki-OK0011FCPZ | | | | N | E | Keyboard(Refer to Matrix) | ｷｰﾎﾞｰﾄﾞ | | |
| | Ki-OK0012FCPZ | | | | N | E | Keyboard(Refer to Matrix) | ｷｰﾎﾞｰﾄﾞ | | |
| | Ki-OK0013FCPZ | | | | N | E | Keyboard(Refer to Matrix) | ｷｰﾎﾞｰﾄﾞ | | |
| | Ki-OK0014FCPZ | | | | N | E | Keyboard(Refer to Matrix) | ｷｰﾎﾞｰﾄﾞ | | |
| | Ki-OK0015FCPZ | | | | N | E | Keyboard(Refer to Matrix) | ｷｰﾎﾞｰﾄﾞ | | |
| | Ki-OK0016FCPZ | | | | N | E | Keyboard(Refer to Matrix) | ｷｰﾎﾞｰﾄﾞ | | |
| 22 | CCOVP2402FC01 | | AH | DX | | D | LED cover FT [Americas,MX-KB13] | LED ｶﾊﾞｰ FT | | |
| | CCOVP2402FC02 | 3 | AH | DX | N | D | LED cover FT [Americas,Europe,Australia,Koria,MX-KB13] | LED ｶﾊﾞｰ FT | | Jun/12 R/C |
| 23 | PLNS-0107FCZZ | | AC | DJ | | B | LED lens [Americas,MX-KB13] | LED ﾚﾝｽﾞ | | |
| 24 | CPWBN1955FCE6 | | BC | GJ | | E | USB CONV FT PWB(Refer to Matrix) | USB CONV FT 基板 | | |
| | CPWBN1955FCE4 | | BC | GJ | | E | USB CONV FT PWB(Refer to Matrix) | USB CONV FT 基板 | | |
| | CPWBN1955FCE5 | | AQ | EQ | | E | USB CONV FT PWB(Refer to Matrix) | USB CONV FT 基板 | | |
| 25 | DHAi-5110FCP1 | | | | N | C | Keyboard interface harness [Americas,MX-KB13] | ｷｰﾎﾞｰﾄﾞ中継ﾊｰﾈｽ | | |
| 26 | LX-BZ1208FCZZ | | AB | DD | | C | Screw(3×6) [Americas,MX-KB13] | ﾋﾞｽ | | |
| 27 | CRALP0289FC01 | | AT | EB | | C | Slide rail [Americas,MX-KB13] | ｽﾗｲﾄﾞﾚｰﾙ | | |
| 28 | LX-BZ1207FCZZ | | AA | DD | | C | Screw(3×4) [Americas,MX-KB13] | ﾋﾞｽ | | |
| 29 | PGiDM2575FCZ1 | | AD | DJ | | C | Harness guide FT [Americas,MX-KB13] | ﾊｰﾈｽｶﾞｲﾄﾞ FT | | |
| 30 | LSOU-0243FCZZ | | AN | EQ | | C | Keyboard tray FT [Americas,MX-KB13] | ｷｰﾎﾞｰﾄﾞﾄﾚｲ FT | | |
| | LSOU-0243FCZ1 | 3 | AN | EQ | | C | Keyboard tray FT [Americas,MX-KB13] | ｷｰﾎﾞｰﾄﾞﾄﾚｲ FT | | Aug/12 R/C |
| 31 | QEARP0327FCZZ | | AD | DJ | | C | Lock earth plate [Americas,MX-KB13] | ﾛｯｸｱｰｽ板 | | |
| 32 | PGSK-0067FCPZ | | AD | DJ | | C | Gasket [Americas,MX-KB13] | ｶﾞｽｹｯﾄ | | |
| 33 | LX-BZ0529FCZZ | | AA | DD | | C | Screw [Americas,MX-KB13] | ﾋﾞｽ | | |
| 34 | MSPRD3864FCZ1 | | AC | DJ | | C | Lock lever spring [Americas,MX-KB13] | ﾛｯｸﾚﾊﾞｰｽﾌﾟﾘﾝｸﾞ | | |
| 35 | MLEVP1089FCZZ | | AC | DJ | | C | Lock lever [Americas,MX-KB13] | ﾛｯｸﾚﾊﾞｰ | | |
| 36 | XRESP70-08000 | | AA | DD | | C | E ring(E7) [Americas,MX-KB13] | E ﾘﾝｸﾞ | | |
| 37 | JHNDP0220FCAZ | | AH | DX | N | C | Keyboard handle [Americas,MX-KB13] | ｷｰﾎﾞｰﾄﾞ取手 | | |
| 38 | XESS730P06000 | | AB | DD | | C | Screw(3×6) [Americas,MX-KB13] | ﾋﾞｽ | | |
| 39 | CPLTM8398FC01 | | AV | FG | N | B | Keyboard fixing plate [Americas,MX-KB13] | ｷｰﾎﾞｰﾄﾞ取付板 | | |
| 40 | PSHEP6355FCZZ | | BA | FX | | C | Touch panel fingerprint prevention sheet | ﾀｯﾁﾊﾟﾈﾙ防指ｼｰﾄ | | |
| | | | | | | | | | | |
| | (Unit) | | | | | | | | | |
| 901 | CPNLC0316DS51 | | CC | TZ | | E | Operation panel unit(Refer to Matrix) | 操作ﾊﾟﾈﾙﾕﾆｯﾄ | | |
| | CPNLC0316DS52 | | CE | UF | N | E | Operation panel unit(Refer to Matrix) | 操作ﾊﾟﾈﾙﾕﾆｯﾄ | | |
| | CPNLC0316DS54 | | | | N | E | Operation panel unit(Refer to Matrix) | 操作ﾊﾟﾈﾙﾕﾆｯﾄ | | |

## Matrix

| No.1 | 操作ﾊﾟﾈﾙ B(Operation panel B) | | | | | | | | | | | | | |
|---|---|---|---|---|---|---|---|---|---|---|---|---|---|---|
| PARTS CODE | MX-7040N MX-6240N | MX-6540FN | | | | | | | | | | | | |
| CPNLC0316FC05 | | 1st lot | | | | | | | | | | | | |
| CPNLC0316FC06 | 1st lot | | | | | | | | | | | | | |

## 3 操作部 ,MX-KB13(Operation unit,MX-KB13)

## Matrix

| No.20 | 操作台板 (Operation base plate) | | | | | | | | | | | | | | |
|---|---|---|---|---|---|---|---|---|---|---|---|---|---|---|---|
| PARTS CODE | MX-7040N MX-6240N | | MX-6540FN | MX-KB13 | | | | | | | | | | | |
| | Americas | Europe,Australia, Asia,Class B | Japan（日本） | Japan（日本）, Europe, Australia,Asia | | | | | | | | | | | |
| LDAiU0874FCAZ | | 1st lot | 1st lot | | | | | | | | | | | | |
| LDAiU0873FCAZ | 1st lot | | | 1st lot | | | | | | | | | | | |

| No.21 | ｷｰﾎﾞｰﾄﾞ (Keyboard) | | | | | | | | | | | | | | |
|---|---|---|---|---|---|---|---|---|---|---|---|---|---|---|---|
| PARTS CODE | Japanese （日本） | English (U.S.A.) | English (U.Kingdom) | German | French | Swedish/Finnish | Norwegian | Danish | | | | | | | |
| Ki-OK0009FCPZ | 1st lot | | | | | | | | | | | | | | |
| Ki-OK0010FCPZ | | 1st lot | | | | | | | | | | | | | |
| Ki-OK0011FCPZ | | | 1st lot | | | | | | | | | | | | |
| Ki-OK0012FCPZ | | | | 1st lot | | | | | | | | | | | |
| Ki-OK0013FCPZ | | | | | 1st lot | | | | | | | | | | |
| Ki-OK0014FCPZ | | | | | | 1st lot | | | | | | | | | |
| Ki-OK0015FCPZ | | | | | | | 1st lot | | | | | | | | |
| Ki-OK0016FCPZ | | | | | | | | 1st lot | | | | | | | |

| No.24 | USB CONV FT 基板 (USB CONV FT PWB) | | | | | | | | | | | | | | |
|---|---|---|---|---|---|---|---|---|---|---|---|---|---|---|---|
| PARTS CODE | MX-7040N MX-6240N | MX-KB13 | | | | | | | | | | | | | |
| | Americas | Australia,Asia, ClassB | Europe | Japan（日本） | | | | | | | | | | | |
| CPWBN1955FCE6 | | | | 1st lot | | | | | | | | | | | |
| CPWBN1955FCE4 | 1st lot | 1st lot | | | | | | | | | | | | | |
| CPWBN1955FCE5 | | | 1st lot | | | | | | | | | | | | |

## 3 操作部 ,MX-KB13(Operation unit,MX-KB13)

## Matrix

| No.901 | 操作ﾊﾟﾈﾙﾕﾆｯﾄ (Operation panel unit) | | | | | | | | | | | | | | |
|---|---|---|---|---|---|---|---|---|---|---|---|---|---|---|---|
| PARTS CODE | MX-7040N<br>MX-6240N | | MX-6540FN | | | | | | | | | | | | |
| | Americas | Europe,Australia,<br>Asia,Class B | Japan（日本） | | | | | | | | | | | | |
| CPNLC0316DS51 | | | 1st lot | | | | | | | | | | | | |
| CPNLC0316DS52 | 1st lot | | | | | | | | | | | | | | |
| CPNLC0316DS54 | | 1st lot | | | | | | | | | | | | | |

# 3 操作部 ,MX-KB13(Operation unit,MX-KB13)

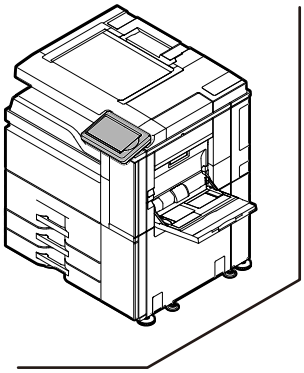

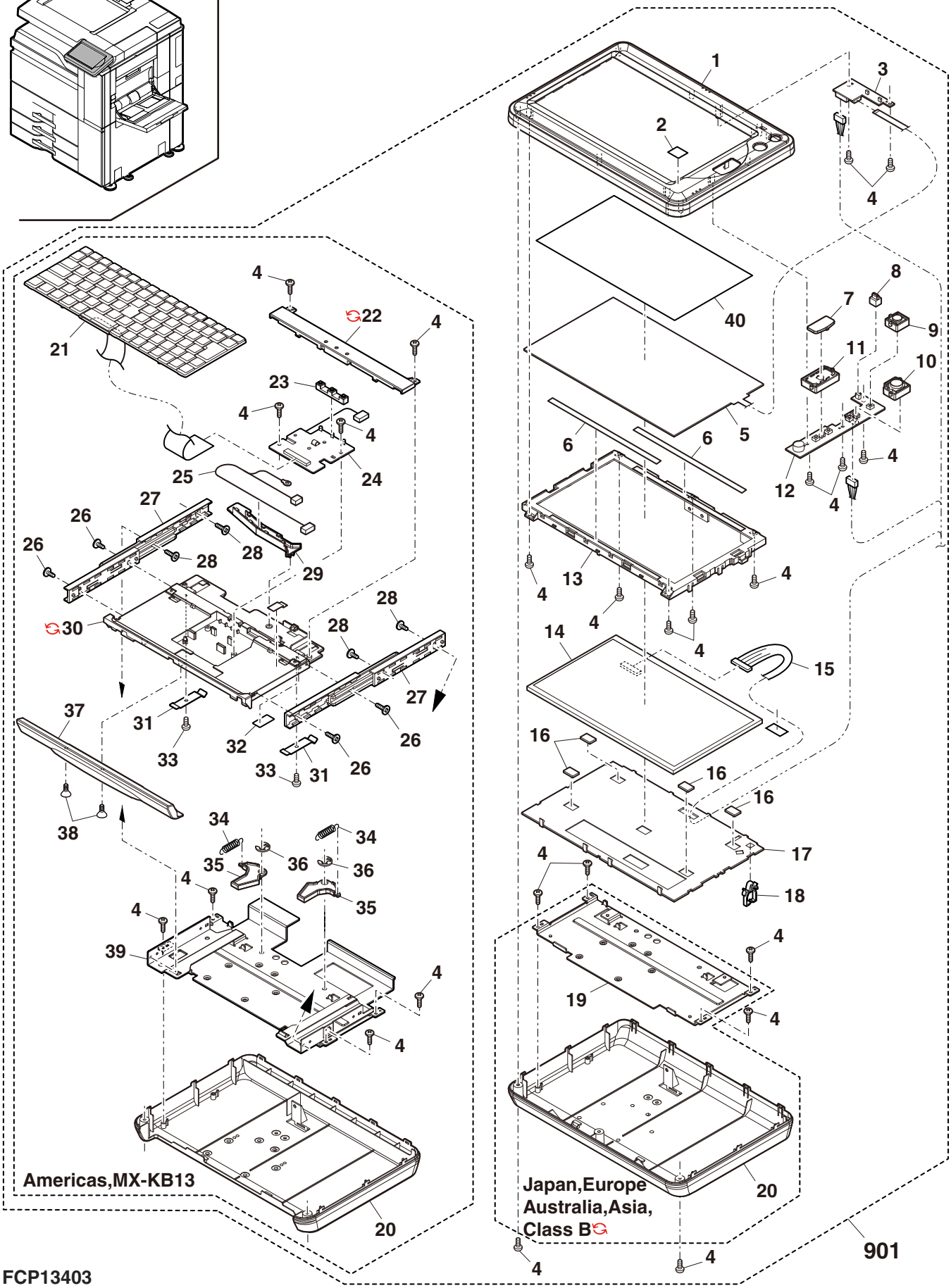

## 4 DSPF 外装部 (DSPF Exteriors)

| NO. | PARTS CODE | Inter-change | PRICE RANK Ex. | PRICE RANK Ja. | NEW MARK | PART RANK | DESCRIPTION | | TR No. | Effective time |
|---|---|---|---|---|---|---|---|---|---|---|
| 1 | TLABH5614FCZZ | | AH | DX | | D | Original read label(Refer to Matrix) | 原稿読取部ﾗﾍﾞﾙ | | |
| | TLABH5614FCZ1 | 3 | AP | EQ | N | D | Original read label(Refer to Matrix) | 原稿読取部ﾗﾍﾞﾙ | | Mar/12 |
| | TLABH5614FCZZ | 1 | AH | DX | | D | Original read label(Refer to Matrix) | 原稿読取部ﾗﾍﾞﾙ | | Jul/12 |
| | TLABH5615FCZZ | | AR | EQ | N | D | Original read label(Refer to Matrix) | 原稿読取部ﾗﾍﾞﾙ | | |
| | TLABH5615FCZ1 | 3 | AT | EZ | N | D | Original read label(Refer to Matrix) | 原稿読取部ﾗﾍﾞﾙ | | Mar/12 |
| | TLABH5615FCZZ | 1 | AR | EQ | | D | Original read label(Refer to Matrix) | 原稿読取部ﾗﾍﾞﾙ | | Jul/12 |
| 2 | XHBS740P08000 | | AA | DD | | C | Screw(4×8) | ﾋﾞｽ | | |
| 3 | PCOVP1897FCAZ | | AR | EQ | N | D | Paper feed cover | 給紙ｶﾊﾞｰ | | |
| 4 | XHBS730P06000 | | AC | DD | | C | Screw(3×6) | ﾋﾞｽ | | |
| 5 | GCAB-1126FCAZ | | BA | FX | N | D | Rear cabinet upper | 後ｷｬﾋﾞ上 | | |
| 6 | XJBS740P12000 | | AB | DD | | C | Screw(4×12) | ﾋﾞｽ | | |
| 7 | PCOVP1894FCAZ | | AG | DX | N | D | Rom cover | ﾛﾑｶﾊﾞｰ | | |
| 8 | LX-NZ0088FCZZ | | AC | DD | | C | Speed nut | ｽﾋﾟｰﾄﾞﾅｯﾄ | | |
| 9 | GCAB-1129FCAZ | | AG | DS | N | D | Left rear lower cabinet | 左後下ｷｬﾋﾞ | | |
| 10 | LSOU-0207FCA1 | | AX | FG | N | D | Delivery tray | 排紙ﾄﾚｲ | | |
| 11 | LSOU-0208FCBZ | | AK | DX | N | D | Delivery extension tray | 排紙延長ﾄﾚｲ | | |
| 12 | GCAB-1128FCAZ | | AV | FG | N | D | Right lower cabinet | 右下ｷｬﾋﾞ | | |
| 13 | XEBS740P10000 | | AA | DD | | C | Screw(4×10) | ﾋﾞｽ | | |
| 14 | MSPRC3472FCZZ | | AC | DJ | | C | OC pressure spring | OC 加圧ｽﾌﾟﾘﾝｸﾞ | | |
| 15 | LPLTP6631FCZZ | | AC | DJ | | C | OC pressure plate | OC 加圧板 | | |
| 16 | PSHEZ5165FCZZ | | AK | DX | | C | OC mat sheet | OC ﾏｯﾄｼｰﾄ | | |
| 17 | PSHEZ5432FCZ6 | | AX | FG | | C | OC mat | OC ﾏｯﾄ | | |
| 18 | LSTPP0011QSZZ | | AC | DJ | | C | Resin ring(E3) | 樹脂ﾘﾝｸﾞ | | |
| 19 | MLEVP0992FCZZ | | AD | DJ | | C | Release link lever | 圧解ﾘﾝｸﾚﾊﾞｰ | | |
| 20 | LX-BZ0901FCPZ | | AC | DD | | C | Drawer screw | ﾄﾞﾛｱﾋﾞｽ | | |
| 21 | MSPRT3488FCZZ | | AC | DJ | | C | Release lever spring | 圧解ﾚﾊﾞｰ ｽﾌﾟﾘﾝｸﾞ | | |
| 22 | LHLDZ1691FCZZ | | AC | DJ | | C | Pressure release shaft holder | 圧解軸ﾎﾙﾀﾞｰ | | |
| 23 | GCAB-1124FCAZ | | AY | FQ | N | D | Front cabinet | ﾌﾛﾝﾄｷｬﾋﾞ | | |
| 24 | TLABH5616FCZZ | | AD | DJ | N | D | Lower door open/close label L(Refer to Matrix) | 下ﾄﾞｱ開閉ﾗﾍﾞﾙL | | |
| | TLABH5616FCZ1 | 3 | AE | DJ | N | D | Lower door open/close label L(Refer to Matrix) | 下ﾄﾞｱ開閉ﾗﾍﾞﾙL | | Mar/12 |
| | TLABH5616FCZZ | 1 | AD | DJ | | D | Lower door open/close label L(Refer to Matrix) | 下ﾄﾞｱ開閉ﾗﾍﾞﾙL | | Jul/12 |
| 25 | TLABH5617FCZZ | | AD | DJ | N | D | Lower door open/close label R(Refer to Matrix) | 下ﾄﾞｱ開閉ﾗﾍﾞﾙR | | |
| | TLABH5617FCZ1 | 3 | AE | DJ | N | D | Lower door open/close label R(Refer to Matrix) | 下ﾄﾞｱ開閉ﾗﾍﾞﾙR | | Mar/12 |
| | TLABH5617FCZZ | 1 | AD | DJ | N | D | Lower door open/close label R(Refer to Matrix) | 下ﾄﾞｱ開閉ﾗﾍﾞﾙR | | Jul/12 |
| 26 | CCLEZ0020RS51 | | AK | DX | | D | Glass cleaner | ｶﾞﾗｽｸﾘｰﾅｰ | | |
| 27 | TLABZ5630FCZZ | | AL | EB | | D | Original size label(Refer to Matrix) | 原稿ｻｲｽﾞﾗﾍﾞﾙ | | |
| | TLABZ5630FCZ1 | 3 | AP | EQ | N | D | Original size label(Refer to Matrix) | 原稿ｻｲｽﾞﾗﾍﾞﾙ | | Mar-12 |
| | TLABZ5630FCZZ | 1 | AL | EB | | D | Original size label(Refer to Matrix) | 原稿ｻｲｽﾞﾗﾍﾞﾙ | | Jul/12 |
| | TLABZ5631FCZZ | | AL | EB | N | D | Original size label(Refer to Matrix) | 原稿ｻｲｽﾞﾗﾍﾞﾙ | | |
| | TLABZ5631FCZ1 | 3 | AL | EB | N | D | Original size label(Refer to Matrix) | 原稿ｻｲｽﾞﾗﾍﾞﾙ | | Mar/12 |
| | TLABZ5631FCZZ | 1 | AL | EB | | D | Original size label(Refer to Matrix) | 原稿ｻｲｽﾞﾗﾍﾞﾙ | | Jul/12 |
| | TLABZ5632FCZZ | - | | | N | D | Original size label(Refer to Matrix) | 原稿ｻｲｽﾞﾗﾍﾞﾙ | | 1st lot |
| | (Unit) | | | | | | | | | |
| 901 | DUNT-8808DSZZ | | CX | ** | N | E | DSPF unit [Refer to Matrix][Include Block[4]-[16]] | DSPF ﾕﾆｯﾄ | | |
| | DUNT-8808DS11 | - | | | N | E | DSPF unit [Refer to Matrix][Include Block[4]-[16]] | DSPF ﾕﾆｯﾄ | | 1st lot |

## 4 DSPF 外装部 (DSPF Exteriors)

## Matrix

| No.1 | 原稿読取部ﾗﾍﾞﾙ (Original read label) | | | | | | | | | | | | | | |
|---|---|---|---|---|---|---|---|---|---|---|---|---|---|---|---|
| PARTS CODE | MX-7040N MX-6240N | | | MX-6540FN | | | | | | | | | | | |
| | Americas, Europe | Australia, Asia | Class B | Japan（日本） | | | | | | | | | | | |
| TLABH5614FCZZ | | | | 1st lot | | | | | | | | | | | |
| ♻ TLABH5614FCZ1 | | | | Mar/12 | | | | | | | | | | | |
| ♻ TLABH5614FCZZ | | | | Jul/12 | | | | | | | | | | | |
| TLABH5615FCZZ | 1st lot | | | | | | | | | | | | | | |
| ♻ TLABH5615FCZ1 | Mar/12 | 1st lot | | | | | | | | | | | | | |
| ♻ TLABH5615FCZZ | Jul/12 | Jul/12 | 1st lot | | | | | | | | | | | | |

| No.24 | 下ﾄﾞｱ開閉ﾗﾍﾞﾙL(Lower door open/close label L) | | | | | | | | | | | | | | |
|---|---|---|---|---|---|---|---|---|---|---|---|---|---|---|---|
| PARTS CODE | MX-7040N MX-6240N | | | MX-6540FN | | | | | | | | | | | |
| | Americas, Europe | Australia, Asia | Class B | Japan（日本） | | | | | | | | | | | |
| TLABH5616FCZZ | 1st lot | | | 1st lot | | | | | | | | | | | |
| ♻ TLABH5616FCZ1 | Mar/12 | 1st lot | | Mar/12 | | | | | | | | | | | |
| ♻ TLABH5616FCZZ | Jul/12 | Jul/12 | 1st lot | Jul/12 | | | | | | | | | | | |

| No.25 | 下ﾄﾞｱ開閉ﾗﾍﾞﾙR(Lower door open/close label R) | | | | | | | | | | | | | | |
|---|---|---|---|---|---|---|---|---|---|---|---|---|---|---|---|
| PARTS CODE | MX-7040N MX-6240N | | | MX-6540FN | | | | | | | | | | | |
| | Americas, Europe | Australia, Asia | Class B | Japan（日本） | | | | | | | | | | | |
| TLABH5617FCZZ | 1st lot | | | 1st lot | | | | | | | | | | | |
| ♻ TLABH5617FCZ1 | Mar/12 | 1st lot | | Mar/12 | | | | | | | | | | | |
| ♻ TLABH5617FCZZ | Jul/12 | Jul/12 | 1st lot | Jul/12 | | | | | | | | | | | |

## 4 DSPF 外装部 (DSPF Exteriors)

## Matrix

| No.27 | 原稿ｻｲｽﾞﾗﾍﾞﾙ (Original size label) | | | | | | | | | | | | | |
|---|---|---|---|---|---|---|---|---|---|---|---|---|---|---|
| PARTS CODE | MX-7040N MX-6240N | | | MX-6540FN | | | | | | | | | | |
| | Americas, Europe, | Australia, Asia, South Africa | Taiwan | Japan（日本） | | | | | | | | | | |
| TLABZ5630FCZZ | | | | 1st lot | | | | | | | | | | |
| ♻ TLABZ5630FCZ1 | | | | Mar/12 | | | | | | | | | | |
| ♻ TLABZ5630FCZZ | | | | Jul/12 | | | | | | | | | | |
| TLABZ5631FCZZ | 1st lot | | | | | | | | | | | | | |
| ♻ TLABZ5631FCZ1 | Mar/12 | 1st lot | | | | | | | | | | | | |
| ♻ TLABZ5631FCZZ | Jun/12 | Jun/12 | | | | | | | | | | | | |
| TLABZ5632FCZZ | | | 1st lot | | | | | | | | | | | |

| No.901 | DSPF ﾕﾆｯﾄ (DSPF unit) | | | | | | | | | | | | | |
|---|---|---|---|---|---|---|---|---|---|---|---|---|---|---|
| PARTS CODE | MX-7040N MX-6240N | | MX-6540FN | | | | | | | | | | | |
| | Americas, Europe, Australia, Asia, South Africa | Taiwan | Japan（日本） | | | | | | | | | | | |
| DUNT-8808DSZZ | 1st lot | | 1st lot | | | | | | | | | | | |
| DUNT-8808DS11 | | 1st lot | | | | | | | | | | | | |

## 4 DSPF 外装部 (DSPF Exteriors)

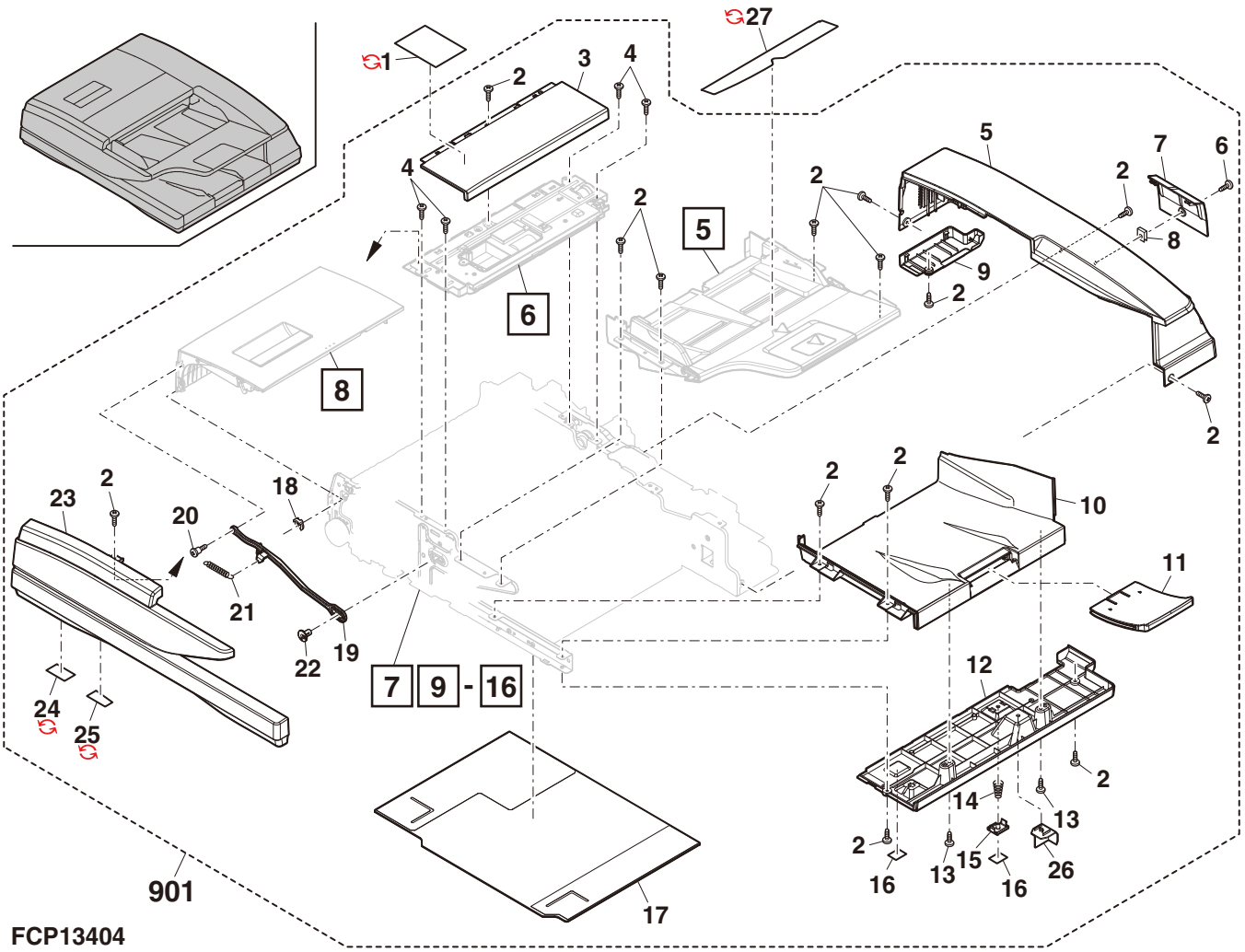

## 5 DSPF 原稿ﾄﾚｲ部 (DSPF Original tay)

| NO. | PARTS CODE | Inter-change | PRICE RANK Ex. | PRICE RANK Ja. | NEW MARK | PART RANK | DESCRIPTION | | TR No. | Effective time |
|---|---|---|---|---|---|---|---|---|---|---|
| 1 | PGiDM2173FCCZ | | AG | DX | N | D | Guide R | ｶﾞｲﾄﾞR | | |
| 2 | LSOU-0211FCAZ | | AS | EQ | N | D | PF rotation tray | 給紙回転ﾄﾚｲ | | |
| | ↻ LSOU-0211FCA1 | 3 | AS | EQ | N | D | PF rotation tray | 給紙回転ﾄﾚｲ | | 12/Mar |
| 3 | PSHEZ3138FCZZ | | AC | DD | | C | Paper feed base sheet | 給紙台ｸﾗﾘｰﾉ | | |
| 4 | PGiDM2172FCCZ | | AG | DX | N | D | Guide F | ｶﾞｲﾄﾞF | | |
| 5 | NGERR1386FCZZ | | AE | DJ | | C | Width detect rack | 幅検知ﾗｯｸ | | |
| 6 | XEPS730P06X00 | | AA | DD | | C | Screw(3×6X) | ﾋﾞｽ | | |
| 7 | LPLTM6756FCZZ | | AD | DJ | | C | Rack fixing plate | ﾗｯｸ押え板 | | |
| 8 | NGERP1385FCZZ | | AF | DS | | C | Width detect pinion gear | 幅検知ﾋﾟﾆｵﾝｷﾞﾔ | | |
| 9 | LX-WZ0094FCZZ | | AA | DD | | C | Poly slider | ﾎﾟﾘｽﾗｲﾀﾞｰ | | |
| 10 | LPLTP5743FCZZ | | AF | DS | | C | Width detect fixing plate | 幅検知取付板 | | |
| 11 | PSHEP5210FCZZ | | AB | DJ | | C | Lift up mylar | ﾘﾌﾄｱｯﾌﾟﾏｲﾗｰ | | |
| 12 | CPWBF1594FCE2 | | AS | EQ | | E | SPF VR PWB | SPF VR基板 | | |
| 13 | XEBS730P08000 | | AC | DD | | C | Screw(3×8) | ﾋﾞｽ | | |
| 14 | XEBS740P10000 | | AA | DD | | C | Screw(4×10) | ﾋﾞｽ | | |
| 16 | LSOU-0212FCAZ | | AG | DX | | D | Paper feed tray S | 給紙ﾄﾚｲS | | |
| 17 | NSFTZ2988FCZZ | | AD | DJ | | C | Rotation tray shaft | 回転ﾄﾚｲ軸 | | |
| 18 | LSOU-0209FCAZ | | AX | FG | | D | Paper feed tray upper | 給紙ﾄﾚｲ上 | | |
| 19 | DHAi-4801FCPZ | | BH | HC | | C | DSPF tray harness | DSPFﾄﾚｲﾊｰﾈｽ | | |
| 20 | XEBS740P25000 | | AC | DD | | C | Screw(4×25) | ﾋﾞｽ | | |
| 21 | MLEVP0794FCAZ | | AD | DD | | C | Length detect actuator | 長さ検知ｱｸﾁｪｰﾀｰ | | |
| 22 | LSOU-0210FCAZ | | AR | EQ | | D | Paper feed tray lower | 給紙ﾄﾚｲ下 | | |
| 23 | VHPGP1S73P+-18 | | AF | DS | | B | Photo sensor(GP1S73P) | ﾌｫﾄｾﾝｻｰ | | |
| | (Unit) | | | | | | | | | |
| 901 | CSOU-0209DS56 | | BF | GN | | E | DSPF original tray unit | DSPF原稿ﾄﾚｲﾕﾆｯﾄ | | |

5 DSPF 原稿ﾄﾚｲ部 (DSPF Original tay)

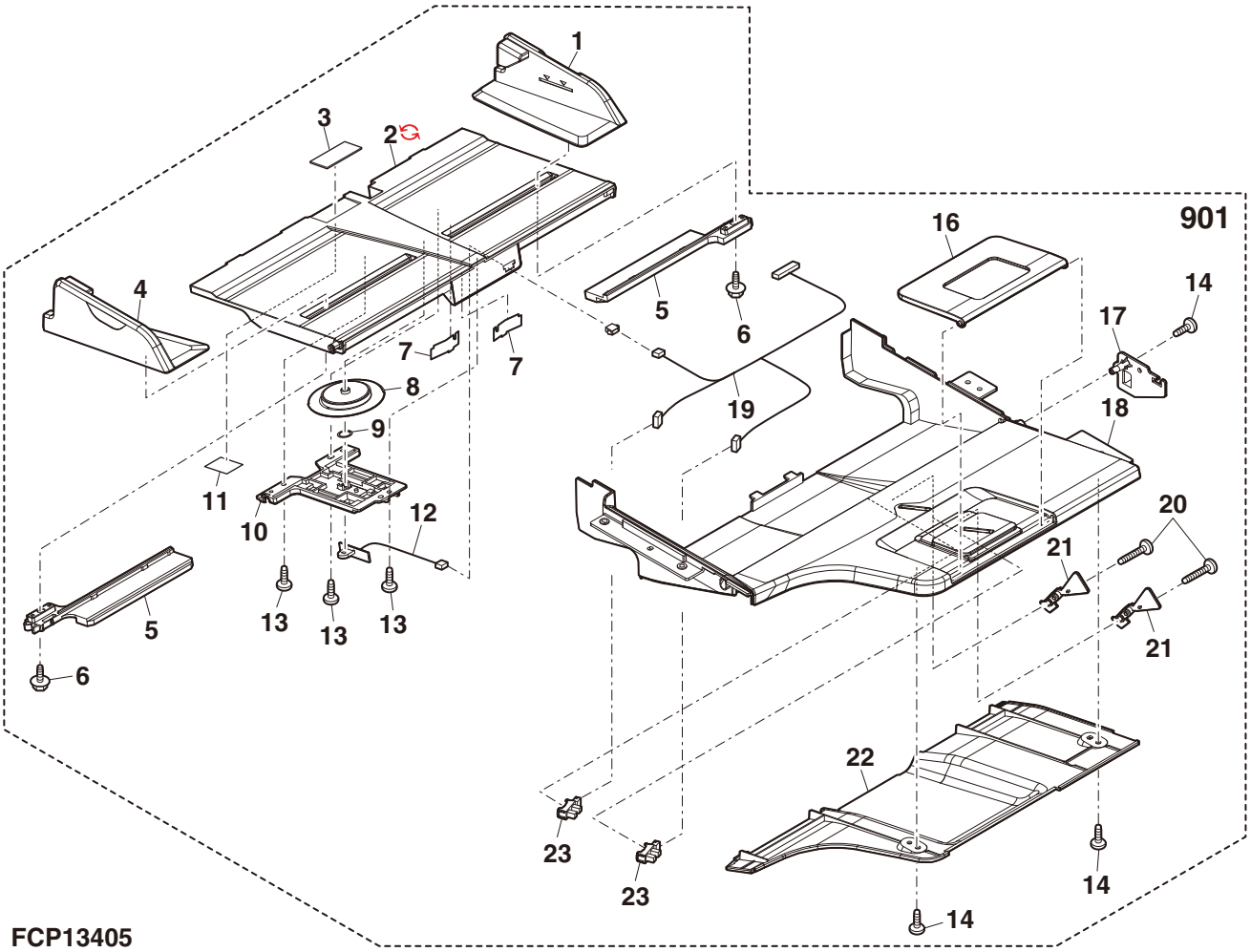

## 6 DSPF 給紙ﾕﾆｯﾄ (DSPF Paper feed unit)

| NO. | PARTS CODE | PRICE RANK Ex. | PRICE RANK Ja. | NEW MARK | PART RANK | DESCRIPTION | |
|---|---|---|---|---|---|---|---|
| 1 | PCOVP1896FCZ1 | AH | DS | | D | Paper feed paper guide upper cover | 給紙ﾍﾟｰﾊﾟｰｶﾞｲﾄﾞ上ｶﾊﾞｰ |
| 2 | XEBS730P08000 | AC | DD | | C | Screw(3×8) | ﾋﾞｽ |
| 3 | XRESP40-06000 | AA | DD | | C | E ring(E4) | E ﾘﾝｸﾞ |
| 4 | NBRGY0720FCZ1 | AQ | EQ | | C | Bearing(φ6-13) | 軸受 |
| 5 | LPLTM6644FCZZ | AN | EQ | | C | Paper feed paper guide upper reinforce plate | 給紙ﾍﾟｰﾊﾟｰｶﾞｲﾄﾞ上補強板 |
| 6 | PCLC-0376FCZZ | AQ | EQ | | B | Paper feed clutch | 給紙ｸﾗｯﾁ |
| 7 | NSFTZ2975FCZZ | AP | EQ | | C | Paper feed roller shaft | 給紙ﾛｰﾗｰｼｬﾌﾄ |
| 8 | NBRGC0136FCZ1 | AC | DJ | | C | Bearing(φ6) | 軸受 |
| 9 | MSPRT3238FCZZ | AC | DJ | | C | Pickup pressure spring | 呼込圧接ｽﾌﾟﾘﾝｸﾞ |
| 10 | PGiDM2170FCZZ | AF | DS | | D | Pickup roller guide | 呼込ﾛｰﾗｰｶﾞｲﾄﾞ |
| 11 | XRESP50-06000 | AA | DD | | C | E ring(E5) | E ﾘﾝｸﾞ |
| 12 | NSFTZ2976FCZZ | AG | DS | | C | Pickup roller shaft | 呼込ﾛｰﾗｰ軸 |
| 13 | NBRGP0764FCZZ | AK | EB | | C | Bearing | 軸受 |
| 15 | NPLYZ0424FCZZ | AD | DJ | | C | Pickup roller pulley(26P) | 呼込ﾛｰﾗｰﾌﾟｰﾘｰ |
| 16 | NBLTH0415FCZZ | AF | DS | | B | Belt(40S2M124) | ﾍﾞﾙﾄ |
| 17 | NPLYZ0461FCZZ | AK | DX | | C | Paper feed roller pulley | 給紙ﾛｰﾗｰﾌﾟｰﾘｰ |
| 18 | NROLR1462FCZZ | AR | EQ | | A | Paper feed roller | 給紙ﾛｰﾗｰ |
| 19 | NROLR1693FCZ2 | BA | FX | | A | DSPF pickup roller | DSPF 呼び込みﾛｰﾗｰ |
| 20 | LHLDR1690FCZZ | AC | DJ | | C | Pickup roller holder | 呼込ﾛｰﾗｰﾎﾙﾀﾞｰ |
| 21 | PSHEP5184FCZZ | AB | DJ | | C | Pickup roller mylar | 呼込ﾛｰﾗｰﾏｲﾗｰ |
| 23 | DHAi-4815FCPZ | BD | GN | | C | Paper feed harness | 給紙ﾊｰﾈｽ |
| 24 | LFiX-0620FCZZ | AD | DJ | | C | Paper feed harness fixture | 給紙ﾊｰﾈｽ押え |
| 25 | VHPGP1A71L3-18 | AG | DS | | B | Photo sensor(GP1A71L3) | ﾌｫﾄｾﾝｻｰ |
| 26 | MLEVP0904FCZZ | AD | DJ | | C | Open/close detect actuator | 開閉検知ｱｸﾁｪｰﾀｰ |
| 27 | MSPRD3477FCZZ | AA | DJ | | C | Paper feed actuator spring | 給紙ｱｸﾁｪｰﾀｰｽﾌﾟﾘﾝｸﾞ |
| 28 | MLEVP0989FCZZ | AC | DJ | | C | PIN actuator | PIN ｱｸﾁｪｰﾀｰ |
| 29 | PGiDM2169FCAZ | AQ | EQ | N | D | Paper feed paper guide upper | 給紙ﾍﾟｰﾊﾟｰｶﾞｲﾄﾞ上 |
| 31 | MLEVP0988FCZZ | AC | DJ | | C | PE upper actuator | PE 上ｱｸﾁｪｰﾀｰ |
| 32 | VHPSG2A141+-1 | AF | DS | | B | Photo sensor(SG2A141) | ﾌｫﾄｾﾝｻｰ |
| | (Unit) | | | | | | |
| 901 | CGiDM2169DS55 | BF | GN | N | E | Paper feed paper guide upper unit | 給紙ﾍﾟｰﾊﾟｰｶﾞｲﾄﾞ上ﾕﾆｯﾄ |
| | | | | | | | |
| | | | | | | | |

## 6 DSPF 給紙ﾕﾆｯﾄ (DSPF Paper feed unit)

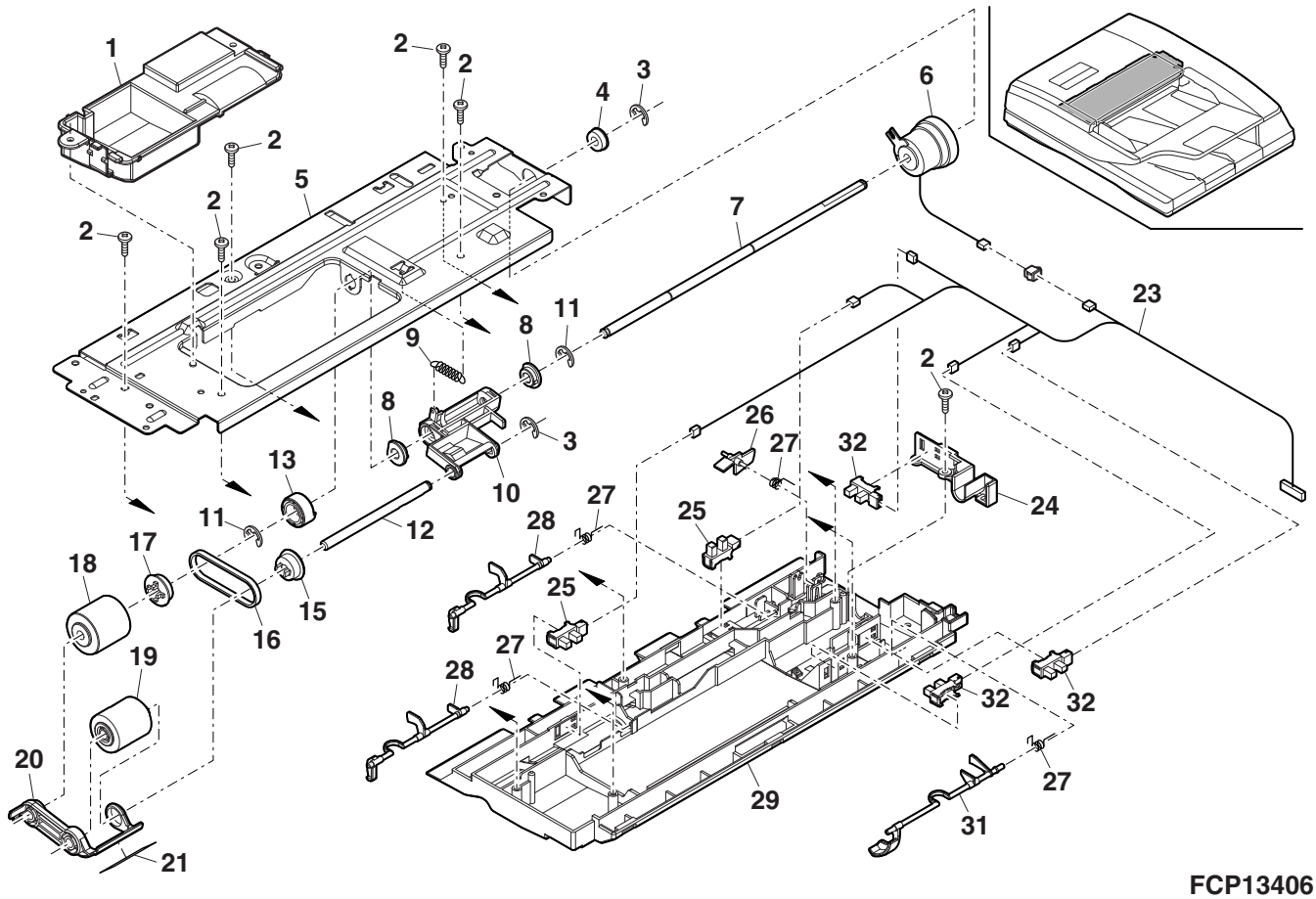


FCP13406

## 7 DSPF 分離ﾕﾆｯﾄ (DSPF Separation unit)

| NO. | PARTS CODE | PRICE RANK | | NEW MARK | PART RANK | DESCRIPTION | |
|---|---|---|---|---|---|---|---|
| | | Ex. | Ja. | | | | |
| 1 | PCOVP1904FCAZ | AG | DX | N | D | Paper feed paper guide lower cover | 給紙ﾍﾟｰﾊﾟｰｶﾞｲﾄﾞ下ｶﾊﾞｰ |
| 2 | XJBS740P12000 | AB | DD | | C | Screw(4×12) | ﾋﾞｽ |
| 3 | PSHEP5161FCZZ | AK | EB | | C | Front separate sheet | 前捌きｼｰﾄ |
| 4 | LX-NZ0088FCZZ | AC | DD | | C | Speed nut | ｽﾋﾟｰﾄﾞﾅｯﾄ |
| 5 | PSHEP5407FCZZ | AA | DJ | | C | Transport mylar | 搬送ﾏｲﾗｰ |
| 6 | PGiDM2171FCA1 | AR | EQ | N | D | Paper feed paper guide lower | 給紙ﾍﾟｰﾊﾟｰｶﾞｲﾄﾞ下 |
| 7 | LSTYM0367FCZZ | AH | DX | | C | Paper feed section stay | 給紙部ｽﾃｲ |
| 8 | MSPRT4027FCZZ | AF | DS | | C | Return compression spring | 逆転圧縮ｽﾌﾟﾘﾝｸﾞ |
| 9 | CPLTM6645FC02 | AF | DS | | C | Separate roller support plate | 分離ﾛｰﾗｰ支持板 |
| 10 | XHBS730P06000 | AC | DD | | C | Screw(3×6) | ﾋﾞｽ |
| 11 | XHBS740P08000 | AA | DD | | C | Screw(4×8) | ﾋﾞｽ |
| 12 | MLEVP0991FCZZ | AC | DJ | | C | Return compression release lever 2 | 逆転圧縮解除ﾚﾊﾞｰ2 |
| 13 | MLEVP0990FCZZ | AF | DS | | C | Return compression release lever | 逆転圧縮解除ﾚﾊﾞｰ |
| 14 | PCLC-0334FCZZ | AZ | FQ | | B | Paper feed torque limiter | 給紙ﾄﾙｸﾘﾐｯﾀｰ |
| 15 | NCPL-0067FCZZ | AD | DJ | | C | Separate coupling | 分離ｶｯﾌﾟﾘﾝｸﾞ |
| 16 | XRESP50-06000 | AA | DD | | C | E ring(E5) | Eﾘﾝｸﾞ |
| 17 | NBRGY0720FCZ1 | AQ | EQ | | C | Bearing(φ6-13) | 軸受 |
| 18 | LPLTM6646FCZZ | AP | EQ | | C | Separate roller support plate | 分離ﾛｰﾗｰ支持板 |
| 19 | LPiNS0278FCZZ | AB | DJ | | C | Spring pin(φ3-11) | ｽﾌﾟﾘﾝｸﾞﾋﾟﾝ |
| 20 | NSFTZ2978FCZZ | AG | DX | | C | Separate roller shaft A | 分離ﾛｰﾗｰ軸 A |
| 21 | XPSSJ20-12000 | AC | DD | | C | Spring pin(φ2-12) | ｽﾌﾟﾘﾝｸﾞﾋﾟﾝ |
| 22 | NROLR1796FCZZ | BB | GD | | A | Reverse roller | 逆転ﾛｰﾗｰ |
| 24 | LPLTM6647FCZZ | AC | DJ | | C | Separate roller support plate | 分離ﾛｰﾗｰ支持板 |
| 25 | NBRGY0715FCZ2 | AM | EG | | C | Bearing(φ6-10) | 軸受 |
| 27 | NGERH1260FCZZ | AD | DJ | | C | Idle gear(24T) | ｱｲﾄﾞﾙｷﾞﾔ |
| 29 | NSFTZ2979FCZZ | AX | FG | | C | Separate roller shaft B | 分離ﾛｰﾗｰ軸 B |
| 30 | LPiNS0134FCZZ | AB | DD | | C | Pin(φ2-12) | 平行ﾋﾟﾝ |
| 31 | LSTPP0011QSZZ | AC | DJ | | C | Resin ring(E3) | 樹脂ﾘﾝｸﾞ |
| 32 | NSFTZ2977FCZ1 | AV | FG | | C | Separate roller release shaft | 分離ﾛｰﾗｰ圧解軸 |
| 33 | LX-BZ1025FCZZ | AC | DD | | C | Step screw(φ3-4) | 段ﾋﾞｽ |
| 34 | LPLTP6996FCZZ | AC | DJ | | C | Vibration proof plate | 防振板 |
| 35 | PSHEZ5499FCZZ | AA | DJ | | C | Vibration proof sheet | 防振ｼｰﾄ |
| 501 | CGiDM2171DS52 | AV | FG | N | E | Paper feed paper guide lower unit | 給紙ﾍﾟｰﾊﾟｰｶﾞｲﾄﾞ下ﾕﾆｯﾄ |
| 502 | CSTYM0367DS52 | BD | GN | | E | Paper feed section stay unit | 給紙部ｽﾃｲﾕﾆｯﾄ |
| | | | | | | | |

## 7 DSPF 分離ﾕﾆｯﾄ (DSPF Separation unit)

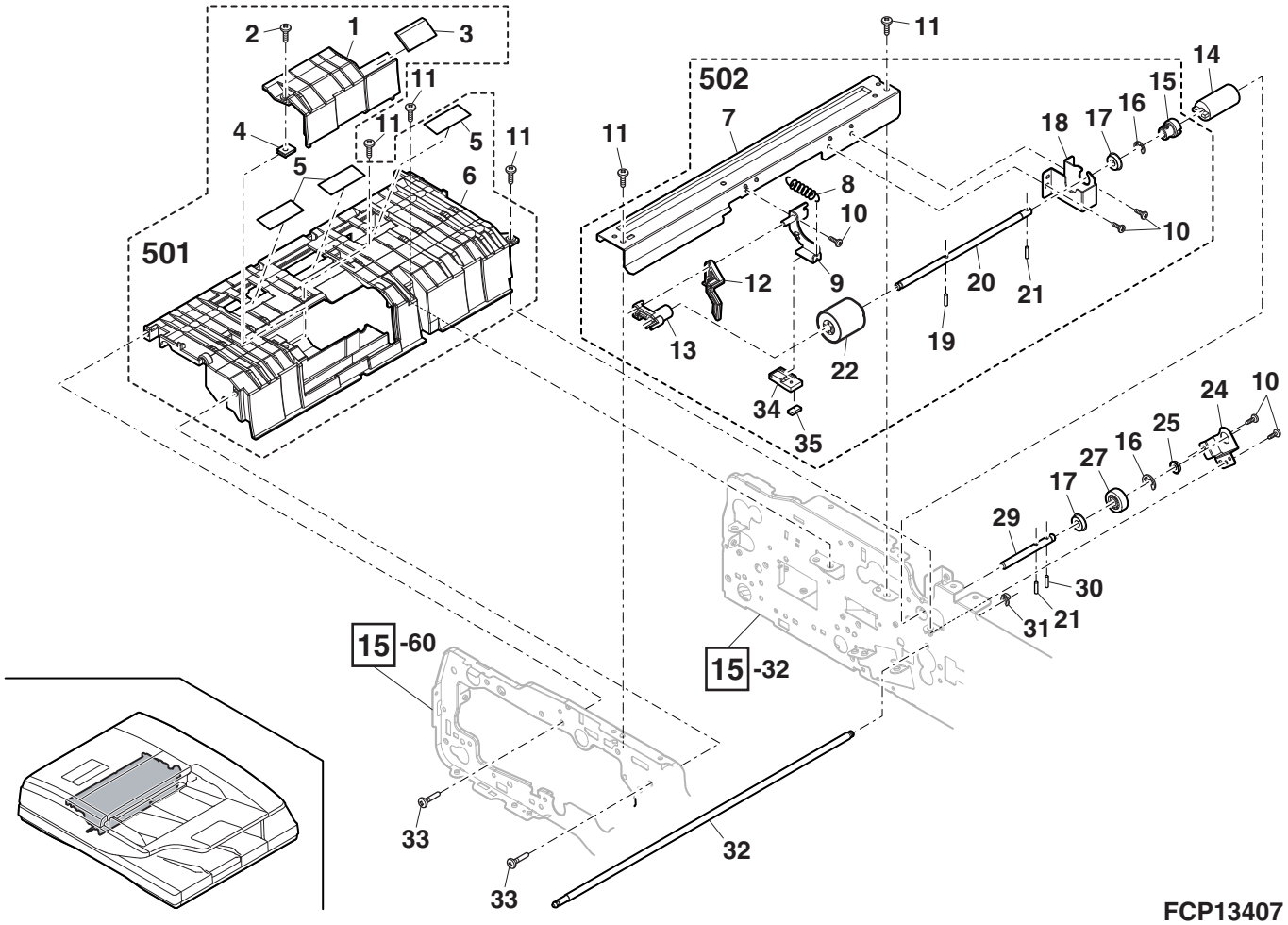

## 8 DSPF 上ﾄﾞｱﾕﾆｯﾄ (DSPF Upper door unit)

| NO. | PARTS CODE | PRICE RANK | | NEW MARK | PART RANK | DESCRIPTION | |
|---|---|---|---|---|---|---|---|
| | | Ex. | Ja. | | | | |
| 1 | PRNGP0090FCZ1 | AB | DJ | | C | Resin ring(E5) | 樹脂ﾘﾝｸﾞ |
| 2 | PHAG-0007FCZZ | AB | DJ | | C | Open/close lever hook R | 開閉ﾚﾊﾞｰﾌｯｸ R |
| 3 | MSPRT3312FCZZ | AD | DJ | | C | PS pressure spring | PS 加圧ｽﾌﾟﾘﾝｸﾞ |
| 4 | NSFTP2966FCZZ | AH | DX | | C | Open/close lever shaft | 開閉ﾚﾊﾞｰｼｬﾌﾄ |
| 5 | MLEVP0981FCAZ | AE | DS | N | C | Open/close lever | 開閉ﾚﾊﾞｰ |
| 6 | GCAB-1130FCAZ | AW | FG | N | D | Upper door cabinet | 上ﾄﾞｱｷｬﾋﾞ |
| 7 | PHAG-0006FCZZ | AB | DJ | | C | Open/close lever hook F | 開閉ﾚﾊﾞｰﾌｯｸ F |
| 8 | MSPRC2643FCZZ | AB | DJ | | C | Lift up actuator spring | ﾘﾌﾄｱｯﾌﾟｱｸﾁｭｴｰﾀｰｽﾌﾟﾘﾝｸﾞ |
| 9 | NSFTP3413FCZZ | AC | DJ | | C | Follower collar shaft | 従動ｺﾛｼｬﾌﾄ |
| 10 | NROLP0896FCZZ | AC | DD | | C | Transport follower roller | 搬送従動ﾛｰﾗｰ |
| 11 | MSPRC3471FCZZ | AB | DJ | | C | Follower pressure spring | 従動加圧ｽﾌﾟﾘﾝｸﾞ |
| 12 | LHLDZ1592FCZZ | AD | DJ | | C | Pressure spring holder | 加圧ｽﾌﾟﾘﾝｸﾞﾎﾙﾀﾞｰ |
| 13 | XEBS730P08000 | AC | DD | | C | Screw(3×8) | ﾋﾞｽ |
| 14 | CFRM-1199FC04 | AF | DS | | D | Upper door frame R | 上ﾄﾞｱﾌﾚｰﾑ R |
| 15 | PGiDM2163FCAZ | AU | FG | N | D | Upper door paper guide | 上ﾄﾞｱﾍﾟｰﾊﾟｰｶﾞｲﾄﾞ |
| 16 | LX-WZ0469FCPZ | AA | DD | | C | Washer | ﾜｯｼｬｰ |
| 17 | XEBS740P10000 | AA | DD | | C | Screw(4×10) | ﾋﾞｽ |
| 18 | CFRM-1199FC03 | AF | DS | | D | Upper door frame F | 上ﾄﾞｱﾌﾚｰﾑ F |
| 19 | PCUSS0389FCZZ | AC | DJ | | C | Upper door cushion | 上ﾄﾞｱｸｯｼｮﾝ |
| | (Unit) | | | | | | |
| 901 | CGiDM2163DS53 | BC | GD | N | E | Upper door unit | 上ﾄﾞｱﾕﾆｯﾄ |
| | | | | | | | |
| | | | | | | | |
| | | | | | | | |

## 8 DSPF 上ﾄﾞｱﾕﾆｯﾄ (DSPF Upper door unit)

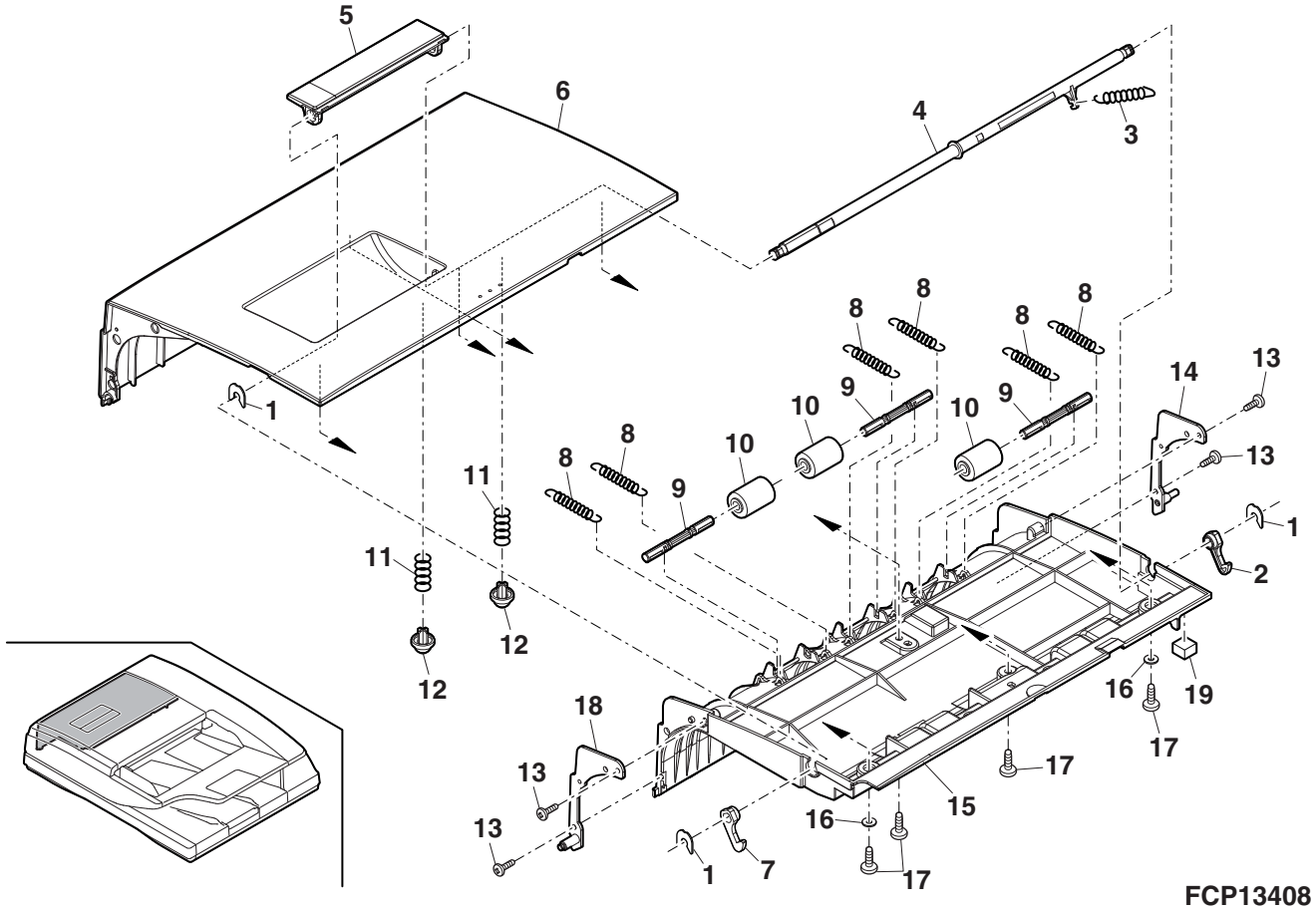

## 9 DSPF 上搬送ﾕﾆｯﾄ (DSPF Upper transport unit)

| NO. | PARTS CODE | Inter-change | PRICE RANK Ex. | PRICE RANK Ja. | NEW MARK | PART RANK | DESCRIPTION | | TR No. | Effective time |
|---|---|---|---|---|---|---|---|---|---|---|
| 1 | XRESP70-08000 | | AA | DD | | C | E ring(E7) | Eﾘﾝｸﾞ | | |
| 2 | NBLTH0470FCZZ | | AR | EQ | | B | Paper feed transport belt | 給紙搬送ﾍﾞﾙﾄ | | |
| 3 | NPLYZ0491FCZZ | | AN | EG | | C | Coupling pulley | ｶｯﾌﾟﾘﾝｸﾞﾌﾟｰﾘｰ | | |
| 4 | NBRGY0809FCZ1 | | AK | EQ | | C | Bearing(φ8-16) | 軸受 | | |
| 5 | LSTPP0011QSZZ | | AC | DJ | | C | Resin ring(E3) | 樹脂ﾘﾝｸﾞ | | |
| 6 | PCLC-0350FCZ1 | | AU | EQ | | B | Separate clutch | 分離ｸﾗｯﾁ | | |
| 8 | XHBS740P08000 | | AA | DD | | C | Screw(4×8) | ﾋﾞｽ | | |
| 9 | NBRGY0934FCZZ | | AH | DX | | C | Bearing(φ6-10) | 軸受 | | |
| 10 | PCOVP1895FCAZ | | AC | DD | | D | Adjustment cover | 調整ｶﾊﾞｰ | | |
| 11 | PGiDM2166FCA1 | | AU | EZ | | D | Transport paper guide upper | 搬送ﾍﾟｰﾊﾟｰｶﾞｲﾄﾞ上 | | |
| 12 | MLEVP0982FCZZ | | AD | DJ | | C | Transport upper actuator | 搬送上ｱｸﾁｪｰﾀｰ | | |
| 13 | MSPRD3477FCZZ | | AA | DJ | | C | Paper feed actuator spring ｱｸﾁｪｰﾀｰｽﾌﾟﾘﾝｸﾞ | 給紙 | | |
| 14 | NROLR1565FCZ2 | | AV | FG | | C | DSPF transport roller 2 | DSPF 搬送ﾛｰﾗｰ 2 | | |
| 16 | VHPGP1A71L3-18 | | AG | DS | | B | Photo sensor(GP1A71L3) | ﾌｫﾄｾﾝｻｰ | | |
| 18 | XHBS730P06000 | | AC | DD | | C | Screw(3×6) | ﾋﾞｽ | | |
| 19 | NROLR1564FCZ2 | | AX | FG | N | C | DSPF transport roller 1 | DSPF 搬送ﾛｰﾗｰ 1 | | |
| | NROLR1564FCZ1 | 1 | AX | FG | | C | DSPF transport roller 1 | DSPF 搬送ﾛｰﾗｰ 1 | | Feb/13 R/C |
| 20 | LDAiU0712FCZZ | | AC | DJ | | D | Lower door fixing base F | 下ﾄﾞｱ固定台 F | | |
| 21 | NROLP1479FCZZ | | AH | DX | | C | DSPF follower roller B | DSPF 従動ﾛｰﾗｰ B | | |
| 22 | NROLP1478FCZZ | | AK | DX | | C | DSPF follower roller A | DSPF 従動ﾛｰﾗｰ A | | |
| 23 | NSFTZ2982FCZZ | | AN | EG | | C | Transport drive roller shaft 1 | 搬送駆動ﾛｰﾗｰ軸 1 | | |
| 24 | LX-BZ1025FCZZ | | AC | DD | | C | Step screw(φ3-4) | 段ﾋﾞｽ | | |
| 25 | LSTPP0358FCZZ | | AF | DS | | C | Wire fixing stopper | ﾜｲﾔｰ押えｽﾄｯﾊﾟｰ | | |
| 26 | LX-WZ0070FCZZ | | AA | DD | | C | Poly slider(φ8-17) | ﾎﾟﾘｽﾗｲﾀﾞｰ | | |
| 27 | PCLR-0259FCZZ | | AB | DD | | C | Brake collar | ﾌﾞﾚｰｷ用ｶﾗｰ | | |
| 28 | MSPRC3313FCZZ | | AD | DJ | | C | DSPF brake spring | DSPFﾌﾞﾚｰｷｽﾌﾟﾘﾝｸﾞ | | |
| 29 | LX-WZ0042FCZ1 | | AA | DD | | C | Washer | 平ﾜｯｼｬｰ | | |
| 30 | PCLC-0353FCZ1 | | AT | EQ | | B | Transport clutch | 搬送ｸﾗｯﾁ | | |
| 31 | LSTPP0405FCZZ | | AC | DJ | | C | Clutch stopper | ｸﾗｯﾁｽﾄｯﾊﾟｰ | | |
| 32 | LBNDJ0071FCZZ | | AC | DJ | | C | Band(RSG-100) | ﾊﾞﾝﾄﾞ | | |
| 501 | CSFTZ2982DS51 | | AX | FG | | E | Transport drive roller shaft 1 unit 1 ﾕﾆｯﾄ | 搬送駆動ﾛｰﾗｰ軸 | | |
| 502 | CGiDM2166DS52 | | AV | FG | | E | Transport upper unit | 搬送上ﾕﾆｯﾄ | | |
| 503 | CROLR1564DS51 | | AV | FG | | E | DSPF transport 1 unit | DSPF 搬送 1 ﾕﾆｯﾄ | | |
| 504 | CROLR1565DS52 | | AU | EZ | | E | DSPF transport 2 unit | DSPF 搬送 2 ﾕﾆｯﾄ | | |

## 9 DSPF 上搬送ﾕﾆｯﾄ (DSPF Upper transport unit)

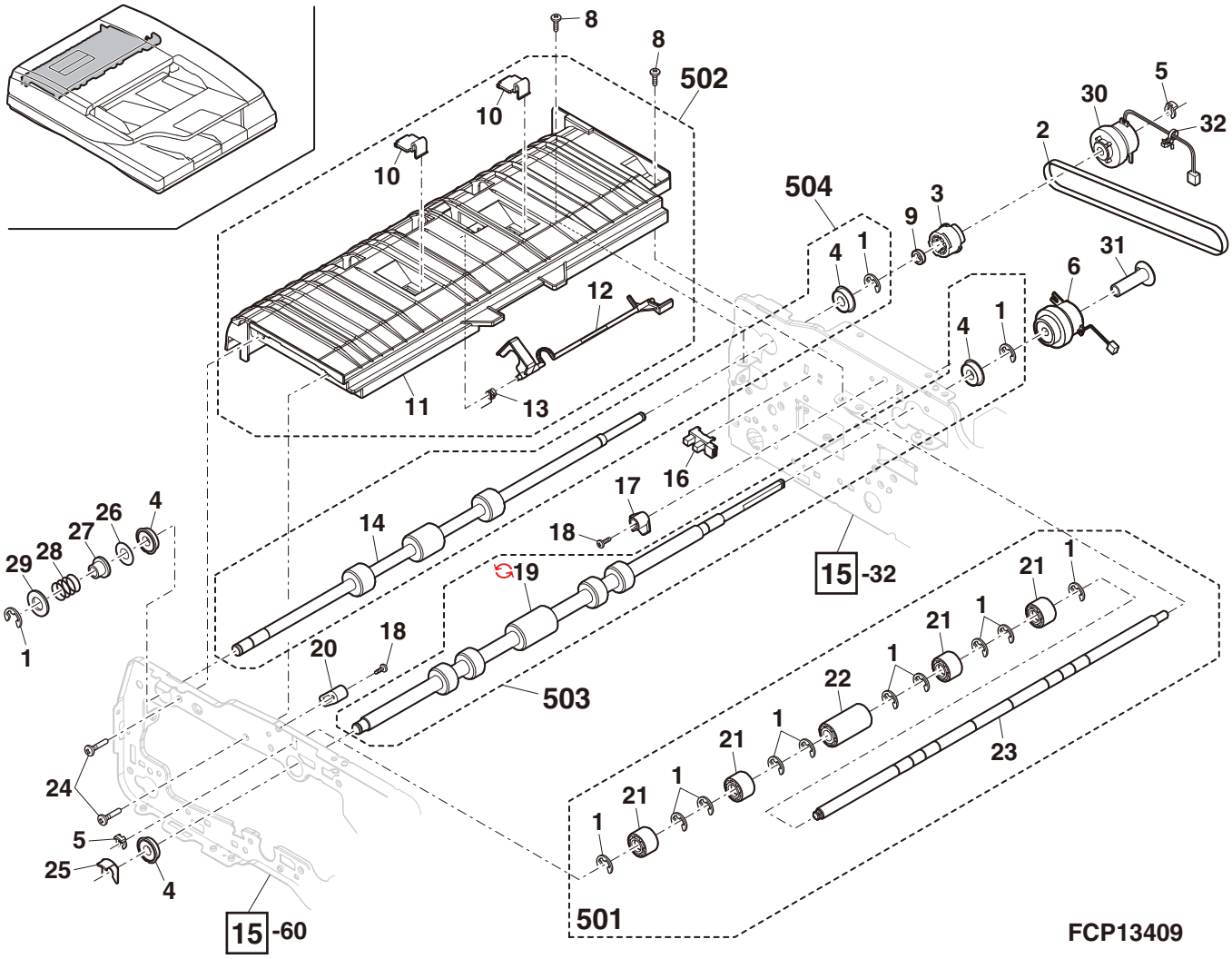

## 10 DSPF 下搬送ユニット 1(DSPF Lower transport unit 1)

| NO. | PARTS CODE | PRICE RANK | | NEW MARK | PART RANK | DESCRIPTION | |
|---|---|---|---|---|---|---|---|
| | | Ex. | Ja. | | | | |
| 3 | PCLC-0352FCZ1 | AU | EQ | | B | PS clutch | PS ｸﾗｯﾁ |
| 4 | NBLTH0468FCZZ | AQ | EQ | | B | PS belt | PS ﾍﾞﾙﾄ |
| 5 | NPLYZ0466FCZZ | AE | DJ | | C | Coupling pulley | ｶｯﾌﾟﾘﾝｸﾞﾌﾟｰﾘｰ |
| 6 | XRESP70-08000 | AA | DD | | C | E ring(E7) | E ﾘﾝｸﾞ |
| 7 | NBRGC0632FCZ1 | AE | DS | | C | Bearing(φ8-16) | 軸受 |
| 8 | MLEVP0984FCZZ | AC | DJ | | C | PS front actuator | PS 前ｱｸﾁｪｰﾀｰ |
| 9 | MSPRD3477FCZZ | AA | DJ | | C | Paper feed actuator spring | 給紙ｱｸﾁｪｰﾀｰｽﾌﾟﾘﾝｸﾞ |
| 10 | VHPGP1A71L3-18 | AG | DS | | B | Photo sensor(GP1A71L3) | ﾌｫﾄｾﾝｻｰ |
| 11 | XHBS730P06000 | AC | DD | | C | Screw(3×6) | ﾋﾞｽ |
| 12 | LPLTP6633FCZZ | AE | DJ | | C | PS front sensor fixing plate | PS 前ｾﾝｻｰ取付板 |
| 13 | NBRGC0763FCZZ | AD | DJ | | C | Bearing(φ8-8) | 軸受 |
| 14 | NRŌLR1568FCZZ | AS | EQ | | C | DSPF PS roller | DSPF PS ﾛｰﾗｰ |
| 15 | PSHEP5406FCZZ | AA | DJ | | C | PS front mylar 2(Short) | PS 前ﾏｲﾗｰ 2 |
| 16 | PSHEP5408FCZZ | AC | DJ | | C | PS front mylar(Long) | PS 前ﾏｲﾗｰ |
| 17 | MSPRC3313FCZZ | AD | DJ | | C | DSPF brake spring | DSPF ﾌﾞﾚｰｷｽﾌﾟﾘﾝｸﾞ |
| 18 | PGiDH2178FCZZ | AK | DX | | D | PS front paper guide | PS 前ﾍﾟｰﾊﾟｰｶﾞｲﾄﾞ |
| 19 | JKNBZ0150FCZZ | AK | DX | | C | PS knob | PS ﾉﾌﾞ |
| 20 | PRNGP0090FCZ1 | AB | DJ | | C | Resin ring(E5) | 樹脂ﾘﾝｸﾞ |
| 21 | QSW-P0506FCZZ | AP | EQ | | B | Sensor | ｾﾝｻｰ |
| 22 | LPLTM6641FCZZ | AC | DJ | | C | Sensor fixing plate | ｾﾝｻｰ取付板 |
| 23 | NBRGC0879FCZZ | AC | DJ | | C | Bearing(φ6-10) | 軸受 |
| 24 | LX-WZ0070FCZZ | AA | DD | | C | Poly slider(φ8-17) | ﾎﾟﾘｽﾗｲﾀﾞｰ |
| 25 | PSHEZ6395FCZZ | AC | DD | | C | PS clutch damper sheet | PS ｸﾗｯﾁ消音ｼｰﾄ |
| 28 | PCLR-0259FCZZ | AB | DD | | C | Brake collar | ﾌﾞﾚｰｷ用ｶﾗｰ |
| 30 | LBŌSZ2683FCZZ | AC | DJ | | C | Reading plate boss | 読み取り板ﾎﾞｽ |
| 31 | MSPRC3474FCZZ | AB | DJ | | C | Platen pressure spring | ﾌﾟﾗﾃﾝ加圧ｽﾌﾟﾘﾝｸﾞ |
| 32 | MARMP0346FCZZ | AC | DJ | | C | Platen arm R | ﾌﾟﾗﾃﾝｱｰﾑ R |
| 33 | LX-WZ0042FCZ1 | AA | DD | | C | Washer | 平ﾜｯｼｬｰ |
| 35 | LPLTM6637FCZ2 | AK | EB | | C | Reading plate | 読取板 |
| 36 | PSHEP5931FCZ1 | AF | DS | | C | Reading plate mylar | 読取板ﾏｲﾗｰ |
| 37 | MARMP0345FCZZ | AC | DJ | | C | Platen arm F | ﾌﾟﾗﾃﾝｱｰﾑ F |
| 38 | GCAB-1131FCAZ | AL | EB | N | D | PS cabinet | PS ｷｬﾋﾞ |
| 39 | XHBS740P08000 | AA | DD | | C | Screw(4×8) | ﾋﾞｽ |
| 40 | MSPRD3476FCZZ | AA | DJ | | C | PS follower earth spring | PS 従動ｱｰｽｽﾌﾟﾘﾝｸﾞ |
| 41 | XEBS730P08000 | AC | DD | | C | Screw(3×8) | ﾋﾞｽ |
| 42 | LPLTM6638FCZ1 | AH | DX | | C | PS follower reinforce plate | PS 従動補強板 |
| 43 | MSPRC3475FCZZ | AC | DJ | | C | Reading plate spring | 読取板ｽﾌﾟﾘﾝｸﾞ |
| 44 | MSPRT3312FCZZ | AD | DJ | | C | PS pressure spring | PS 加圧ｽﾌﾟﾘﾝｸﾞ |
| 45 | NRŌLP1477FCZZ | AH | DX | | C | PS follower roller | PS 従動ﾛｰﾗｰ |
| 46 | NSFTZ2973FCZZ | AF | DS | | C | PS follower roller shaft A | PS 従動ﾛｰﾗｰｼｬﾌﾄ A |
| 47 | NRŌLP1487FCZZ | AK | EB | | C | PS follower roller B | PS 従動ﾛｰﾗｰ B |
| 48 | NSFTZ2974FCZZ | AF | DS | | C | PS follower roller shaft B | PS 従動ﾛｰﾗｰｼｬﾌﾄ B |
| 49 | PGiDM2165FCAZ | AL | EB | N | D | PS roller outside paper guide | PS ﾛｰﾗｰ外ﾍﾟｰﾊﾟｰｶﾞｲﾄﾞ |
| 50 | PSHEP5404FCZ1 | AC | DJ | | C | PT guide mylar 2 | PT ｶﾞｲﾄﾞﾏｲﾗｰ 2 |
| 51 | MSPRC2643FCZZ | AB | DJ | | C | Follower pressure spring | 従動加圧ｽﾌﾟﾘﾝｸﾞ |
| 52 | PSHEP5403FCZ1 | AC | DJ | | C | PT guide mylar 1 | PT ｶﾞｲﾄﾞﾏｲﾗｰ 1 |
| 53 | LX-BZ1025FCZZ | AC | DD | | C | Step screw(φ3-4) | 段ﾋﾞｽ |
| 54 | MSPRT3581FCZZ | AB | DJ | | C | Platen earth spring | ﾌﾟﾗﾃﾝｱｰｽｽﾌﾟﾘﾝｸﾞ |
| 55 | PGSK-0077FCZZ | AE | DS | | C | Gasket FL | ｶﾞｽｹｯﾄ FL |
| 56 | LX-WZ1003HCZZ | AA | DD | | C | Poly slider(8.2×12×0.5) | ﾎﾟﾘｽﾗｲﾀﾞｰ |
| 57 | LSTPP0405FCZZ | AC | DJ | | C | Clutch stopper | ｸﾗｯﾁｽﾄｯﾊﾟｰ |
| 501 | CGiDM2165DS53 | BA | FX | N | E | PS outside paper guide unit | PS 外ﾍﾟｰﾊﾟｰｶﾞｲﾄﾞﾕﾆｯﾄ |
| 502 | CPLTM6637DS53 | AS | EZ | | E | Platen unit | ﾌﾟﾗﾃﾝﾕﾆｯﾄ |
| 504 | CGiDH2178DS51 | AR | EQ | | E | PS front paper guide unit | PS 前ﾍﾟｰﾊﾟｰｶﾞｲﾄﾞﾕﾆｯﾄ |

## 10 DSPF 下搬送ﾕﾆｯﾄ 1(DSPF Lower transport unit 1)

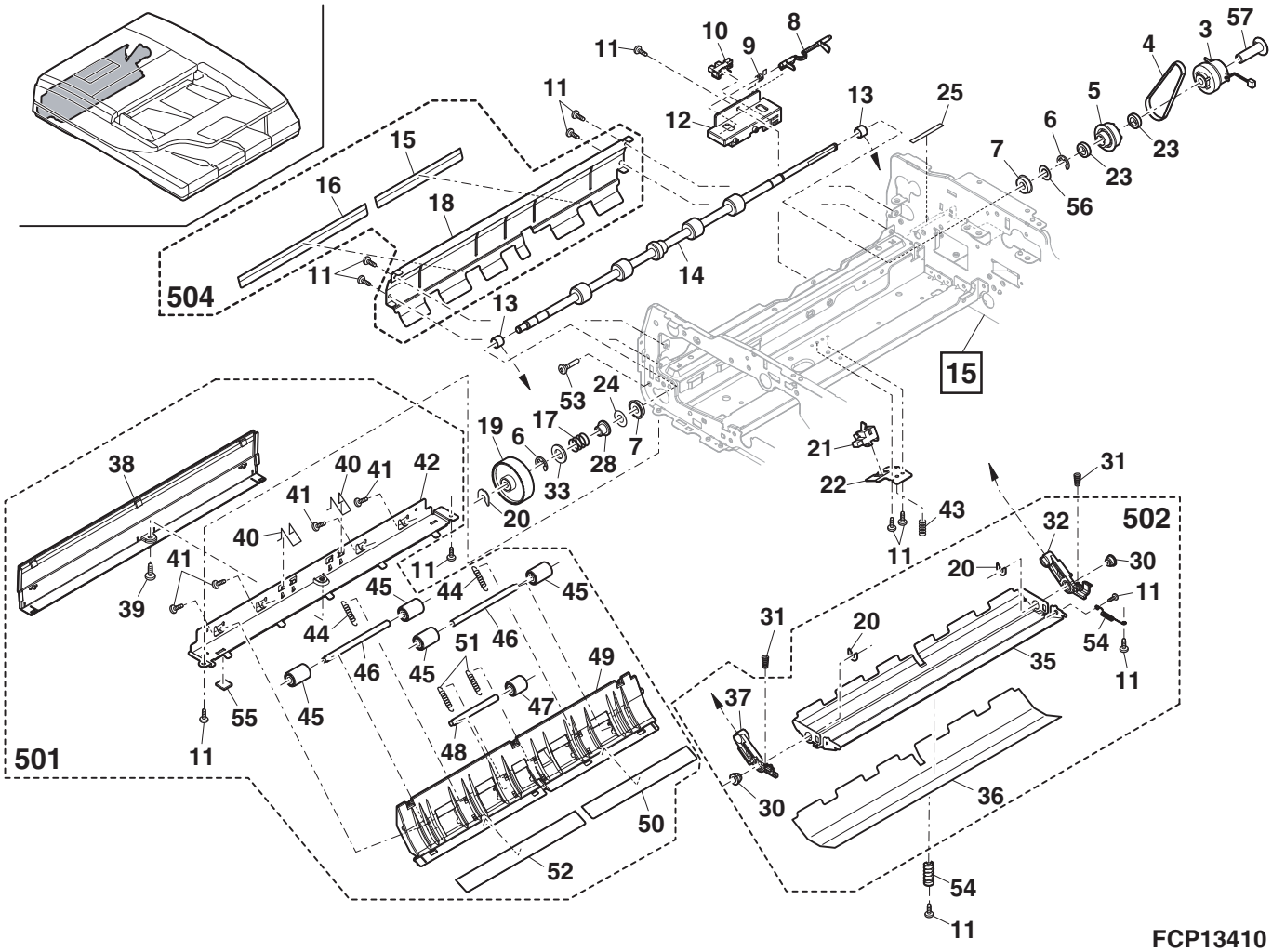

## 11 DSPF 下搬送ﾕﾆｯﾄ 2(DSPF Lower transport unit 2)

| NO. | PARTS CODE | PRICE RANK | | NEW MARK | PART RANK | DESCRIPTION | |
|---|---|---|---|---|---|---|---|
| | | Ex. | Ja. | | | | |
| 1 | NBLTH0469FCZZ | AR | EQ | | B | Transport belt | 搬送ﾍﾞﾙﾄ |
| 2 | NPLYZ0467FCZZ | AD | DJ | | C | Transport pulley | 搬送ﾌﾟｰﾘｰ |
| 3 | XHBS730P06000 | AC | DD | | C | Screw(3×6) | ﾋﾞｽ |
| 5 | XHBS740P08000 | AA | DD | | C | Screw(4×8) | ﾋﾞｽ |
| 6 | PGiDM2162FCAZ | AN | EQ | N | D | Lower door paper guide | 下ﾄﾞｱﾍﾟｰﾊﾟｰｶﾞｲﾄﾞ |
| 7 | LHLDZ1709FCZZ | AC | DJ | | C | White standard pressure spring holder | 白基準加圧ｽﾌﾟﾘﾝｸﾞﾎﾙﾀﾞｰ |
| 8 | MSPRC3473FCZZ | AC | DJ | | C | White standard pressure spring | 白基準加圧ｽﾌﾟﾘﾝｸﾞ |
| 9 | NSFTP3413FCZZ | AC | DJ | | C | Follower collar shaft | 従動ｺﾛｼｬﾌﾄ |
| 10 | NROLP0896FCZZ | AC | DD | | C | Transport follower roller | 搬送従動ﾛｰﾗｰ |
| 11 | MSPRT3523FCZZ | AB | DJ | | C | Lower door follower spring | 下ﾄﾞｱ従動ｽﾌﾟﾘﾝｸﾞ |
| 12 | XBPS730P08KS0 | AB | DD | | C | Screw(3×8KS) | ﾋﾞｽ |
| 13 | PTME-0306FCZZ | AC | DJ | | C | Lower door lock pawl | 下ﾄﾞｱﾛｯｸ爪 |
| 14 | MSPRD3478FCZZ | AC | DJ | | C | Lower door lock spring | 下ﾄﾞｱﾛｯｸｽﾌﾟﾘﾝｸﾞ |
| 15 | NSFTZ2983FCZZ | AL | EB | | C | Lower door lock shaft | 下ﾄﾞｱﾛｯｸｼｬﾌﾄ |
| 16 | LPLTM6636FCZZ | AN | EG | | C | Lower door lock plate | 下ﾄﾞｱﾍﾞｰｽ板 |
| 17 | MLEVP0993FCZZ | AC | DJ | | C | Lower door lock release lever | 下ﾄﾞｱﾛｯｸ解除ﾚﾊﾞｰ |
| 18 | XEBS740P10000 | AA | DD | | C | Screw(4×10) | ﾋﾞｽ |
| 20 | MSPRC3472FCZZ | AC | DJ | | C | OC pressure spring | OC 加圧ｽﾌﾟﾘﾝｸﾞ |
| 21 | LPLTP6631FCZZ | AC | DJ | | C | OC pressure plate | OC 加圧板 |
| 22 | PSHEZ5165FCZZ | AK | DX | | C | OC mat sheet | OC ﾏｯﾄｼｰﾄ |
| 27 | LDAiU0712FCZZ | AC | DJ | | D | Lower door fixing base F | 下ﾄﾞｱ固定台 F |
| 28 | QSW-B0017QSZZ | AF | DS | | B | Waste toner full detect switch(D2X-G) | 廃ﾄﾅｰ満杯検知ｽｲｯﾁ |
| 29 | LHLDZ1695FCZZ | AD | DJ | | C | Lower door open/close detect holder | 下ﾄﾞｱ開閉検知ﾎﾙﾀﾞｰ |
| 30 | LX-BZ1025FCZZ | AC | DD | | C | Step screw(φ3-4) | 段ﾋﾞｽ |
| 31 | CPLTM6229FC05 | AE | DS | | C | White standard fulcrum plate | 白基準支点板 |
| 32 | NBRGY0809FCZ1 | AK | EQ | | C | Bearing(φ8-16) | 軸受 |
| 33 | XRESP70-08000 | AA | DD | | C | E ring(E7) | E ﾘﾝｸﾞ |
| 34 | NROLR1566FCZZ | AV | FG | | C | DSPF transport roller 3 | DSPF 搬送ﾛｰﾗｰ 3 |
| 35 | LPiNS0278FCZZ | AB | DJ | | C | Spring pin(φ3-11) | ｽﾌﾟﾘﾝｸﾞﾋﾟﾝ |
| 36 | LSTPP0358FCZZ | AF | DS | | C | Wire fixing stopper | ﾜｲﾔｰ押えｽﾄｯﾊﾟｰ |
| 37 | VHPGP1A71L3-18 | AG | DS | | B | Photo sensor(GP1A71L3) | ﾌｫﾄｾﾝｻｰ |
| 38 | DHAi-3809FCZ1 | AD | DJ | | C | PPD5 interface harness | PPD5 中継ﾊｰﾈｽ |
| 39 | MSPRD2855FCZZ | AB | DJ | | C | Delivery actuator spring | 排紙ｱｸﾁｪｰﾀｰｽﾌﾟﾘﾝｸﾞ |
| 40 | MLEVP0986FCZZ | AD | DJ | | C | Transport lower actuator | 搬送下ｱｸﾁｪｰﾀｰ |
| 41 | PGiDM2167FCA1 | AN | EQ | N | D | Transport paper guide lower | 搬送ﾍﾟｰﾊﾟｰｶﾞｲﾄﾞ下 |
| 43 | PSHEP5405FCZZ | AC | DJ | | C | Transport roller 3 mylar C | 搬送ﾛｰﾗｰ 3 ﾏｲﾗｰ C |
| 44 | PSHEP5419FCZZ | AC | DJ | | C | Dip up mylar | すくい上げﾏｲﾗｰ |
| 45 | PGiDM2177FCAZ | AH | DX | N | D | Dip up paper guide | すくい上げﾍﾟｰﾊﾟｰｶﾞｲﾄﾞ |
| 46 | LPLTM6662FCZZ | AG | DX | | C | Dip up reinforce plate | すくい上げ補強板 |
| 47 | XEBS730P08000 | AC | DD | | C | Screw(3×8) | ﾋﾞｽ |
| 48 | PMLT-1720FCZZ | AA | DJ | | C | Lower door F cushion | 下ﾄﾞｱ F ｸｯｼｮﾝ |
| 501 | CGiDM2167DS53 | AU | EZ | N | E | Transport lower unit | 搬送下ﾕﾆｯﾄ |
| 502 | DUNT-7530DS13 | | | N | E | Lower door unit | 下ﾄﾞｱﾕﾆｯﾄ |
| 503 | CGiDM2177DS52 | AP | EQ | N | E | Scoop up paper guide unit | すくい上げﾍﾟｰﾊﾟｰｶﾞｲﾄﾞﾕﾆｯﾄ |
| 504 | CHLDZ1695DS51 | AL | EB | | E | Lower door open/close holder unit | 下ﾄﾞｱ開閉ﾎﾙﾀﾞｰﾕﾆｯﾄ |
| 505 | CROLR1566DS51 | AU | EZ | | E | DSPF transport 3 unit | DSPF 搬送 3 ﾕﾆｯﾄ |
| 506 | CPLTM6636DS51 | AW | FG | | E | Lower door base plate unit | 下ﾄﾞｱﾍﾞｰｽ板ﾕﾆｯﾄ |
| 507 | CGiDM2162DS54 | AU | EZ | N | E | Lower door paper guide unit | 下ﾄﾞｱﾍﾟｰﾊﾟｰｶﾞｲﾄﾞﾕﾆｯﾄ |

## 11 DSPF 下搬送ﾕﾆｯﾄ 2(DSPF Lower transport unit 2)

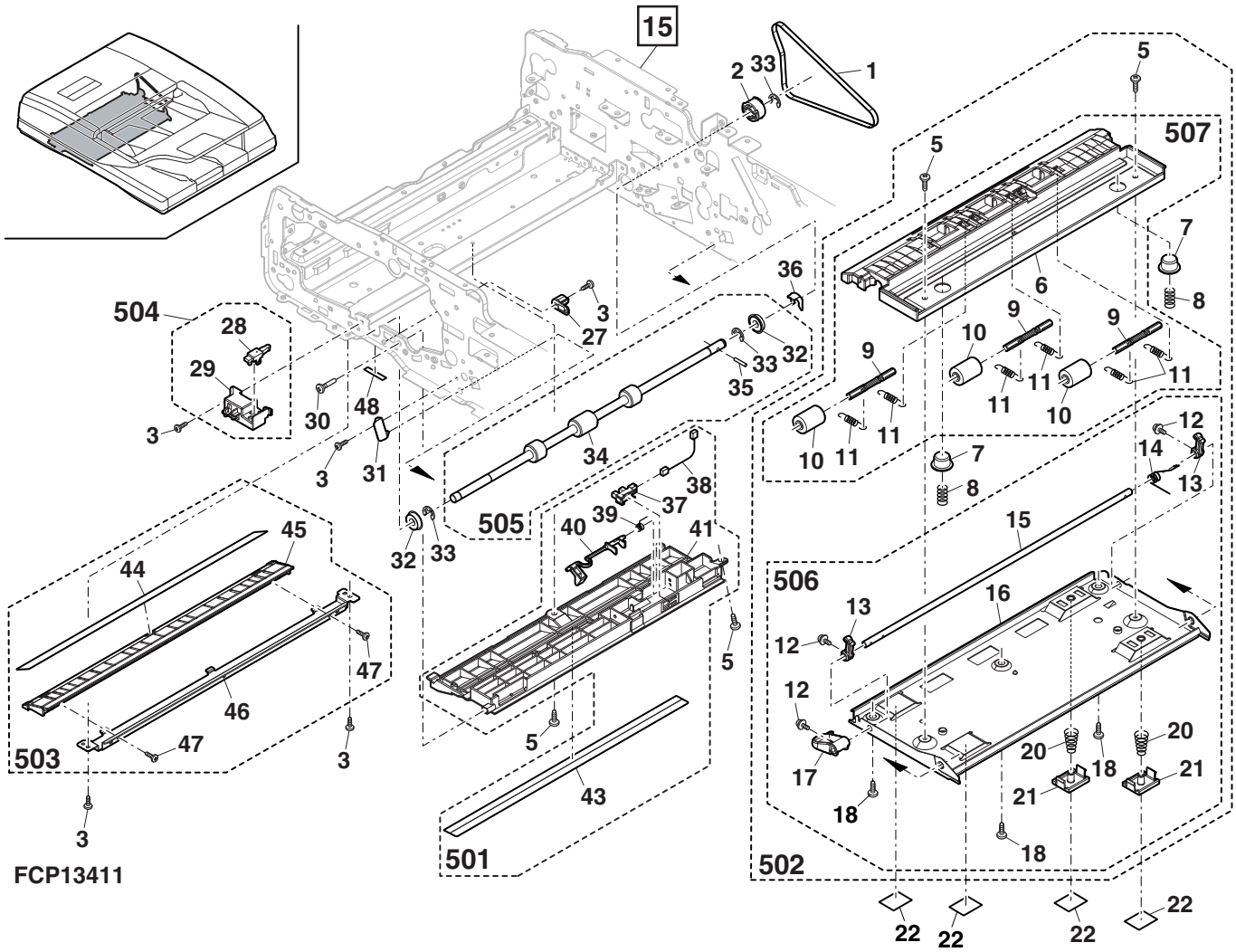

## 12 DSPF 縮小光学ﾕﾆｯﾄ (DSPF Reduction optical unit)

| NO. | PARTS CODE | Inter-change | PRICE RANK Ex. | PRICE RANK Ja. | NEW MARK | PART RANK | DESCRIPTION | | TR No. | Effective time |
|---|---|---|---|---|---|---|---|---|---|---|
| 1 | CPLTM6782FC02 | | AH | DX | | C | CCD harness fixing plate | CCD ﾊｰﾈｽ押え板 | | |
| 2 | XEBS740P10000 | | AA | DD | | C | Screw(4×10) | ﾋﾞｽ | | |
| 3 | CBOX-0184FC01 | | AL | EB | | C | Dark box | 暗箱 | | |
| 4 | XHBS730P08KS0 | | AC | DD | | C | Screw(3×8KS) | ﾋﾞｽ | | |
| 5 | XHBS730P04000 | | AA | DD | | C | Screw(3×4) | ﾋﾞｽ | | |
| 6 | LPLTM7753FCZZ | | AH | DX | | C | Lens unit fixing plate | ﾚﾝｽﾞﾕﾆｯﾄ取付板 | | |
| 7 | PCOVP2252FCZZ | | AH | DX | | D | Protect dust cover | 防塵ｶﾊﾞｰ | | |
| 9 | PSHEP5411FCZ1 | | AA | DJ | | C | Dustproof sheet 2 | 防塵ｼｰﾄ2 | | |
| 10 | PSHEP5410FCZZ | | AB | DJ | | C | Dustproof sheet | 防塵ｼｰﾄ | | |
| 11 | MSPRP3479FCZZ | | AC | DJ | | C | Mirror fixing spring | ﾐﾗｰ押えｽﾌﾟﾘﾝｸﾞ | | |
| 12 | LDAiU0807FCZZ | | AY | FQ | | D | Mirror base | ﾐﾗｰﾍﾞｰｽ | | |
| 13 | CPLTM7621DS71 | | BV | RB | | B | Lens unit | ﾚﾝｽﾞﾕﾆｯﾄ | | |
| 14 | PMiR-0193FCZZ | | BF | GN | | B | 2nd mirror | 第2ﾐﾗｰ | | |
| 15 | PMiR-0164FCZZ | | AP | EQ | | B | 1st mirror | 第1ﾐﾗｰ | | |
| 16 | PMiR-0194FCZZ | | BF | GN | | B | 3rd mirror | 第3ﾐﾗｰ | | |
| 17 | PGUMS0317FCZZ | | AD | DJ | | C | Optical fixing rubber | 光学固定ｺﾞﾑ | | |
| 18 | PMiR-0195FCZZ | | BF | GN | | B | 4th mirror | 第4ﾐﾗｰ | | |
| 19 | PCOVP2253FCZ1 | | AL | EB | | D | Mirror base cover | ﾐﾗｰﾍﾞｰｽｶﾊﾞｰ | | |
| 21 | CPLTM6656FC02 | | AH | DX | | C | Optical fixing plate | 光学固定板 | | |
| 25 | XHBS730P08000 | | AB | DD | | C | Screw(3×8) | ﾋﾞｽ | | |
| 32 | XHBS740P08000 | | AA | DD | | C | Screw(4×8) | ﾋﾞｽ | | |
| 34 | LX-BZ0007QSPZ | | AC | DD | | C | Lens base adjust screw | ﾚﾝｽﾞﾍﾞｰｽ調整ﾋﾞｽ | | |
| 35 | LDAiU0787FCZZ | | AG | DX | | D | Lens base | ﾚﾝｽﾞﾍﾞｰｽ | | |
| 36 | MSPRP0164QSZZ | | AC | DJ | | C | Lens base fixing spring | ﾚﾝｽﾞﾍﾞｰｽ押えｽﾌﾟﾘﾝｸﾞ | | |
| 37 | LX-BZ0022QSPZ | | AC | DD | | C | Step screw | 段ﾋﾞｽ | | |
| 38 | PMLT-1789FCZZ | | AC | DJ | | C | CCD cushion | CCD ﾓﾙﾄ | | |
| 39 | PCUSS0393FCZZ | | AC | DJ | | C | Optical cushion | 光学ｸｯｼｮﾝ | | |
| 40 | LPLTM8171FCZZ | | AK | DX | | C | LED fixing plate DSPF | LED 取付板 DSPF | | |
| 41 | LPLTP7985FCZZ | | AK | EB | | C | Optical web guide plate | 導光板 | | |
| 42 | PGiDM2594FCZZ | | AP | EQ | | D | Reading glass guide | 読取ｶﾞﾗｽｶﾞｲﾄﾞ | | |
| 43 | PGLSP0112FCZZ | | BN | LE | | B | Reading glass | 読取ｶﾞﾗｽ | | |
| 44 | PREFL0180FCZZ | | AN | EG | | C | Reflector | ﾘﾌﾚｸﾀｰ | | |
| 45 | PSHEP6311FCZZ | | AC | DD | | C | LED insulation sheet | LED 絶縁ｼｰﾄ | | |
| 46 | PTPE-0284FCZZ | | AB | DJ | | C | Read glass tape | 読取ｶﾞﾗｽﾃｰﾌﾟ | | |
| 48 | CPWBN1992FCE1 | | BM | HR | | E | LED DSPF unit | LED DSPF ﾕﾆｯﾄ | | |
| 50 | DHAi-4774FCPZ | | AM | EG | | C | LED harness | LED ﾊｰﾈｽ | | |
| 52 | XHBS740P14000 | | AB | DD | | C | Screw(4×14) | ﾋﾞｽ | | |
| 53 | XEBS730P06000 | | AA | DD | | C | Screw(3×6) | ﾋﾞｽ | | |
| 54 | PMLT-1407FCZZ | | AC | DJ | | C | Damper sponge A | 消音ｽﾎﾟﾝｼﾞ A | | |
| 55 | PSHEP6322FCZZ | | AD | DJ | | C | Reading glass mylar | 読取ｶﾞﾗｽﾏｲﾗｰ | | |
| 56 | LX-BZ0833FCPZ | | AC | DD | | C | Screw | ﾋﾞｽ | | |
| 57 | PSHEP6124FCZZ | | AC | DJ | | C | Lamp dustproof mylar | ﾗﾝﾌﾟ防塵ﾏｲﾗｰ | | |
| 58 | PMLT-1864FCZZ | | AF | DS | | C | Dustproof cushion R | 防塵ｸｯｼｮﾝ R | | |
| 59 | PMLT-1863FCZZ | | AE | DJ | | C | Dustproof cushion F | 防塵ｸｯｼｮﾝ F | | |
| 60 | PGSK-0088FCPZ | | AH | DX | | C | Gasket(L=30) [Taiwan] | ｶﾞｽｹｯﾄ | | 1st lot |
| 501 | CGiDM2594DS51 | | AY | FQ | | E | Lamp unit | ﾗﾝﾌﾟﾕﾆｯﾄ | | |
| | CGiDM2594DS55 | 3 | BN | HZ | | E | Lamp unit [Change supply form] | ﾗﾝﾌﾟﾕﾆｯﾄ | | 13/Aug |
| 502 | CDAiU0807DS52 | | BE | GN | | E | Mirror base unit | ﾐﾗｰﾍﾞｰｽﾕﾆｯﾄ | | |

## 12 DSPF 縮小光学ﾕﾆｯﾄ (DSPF Reduction optical unit)

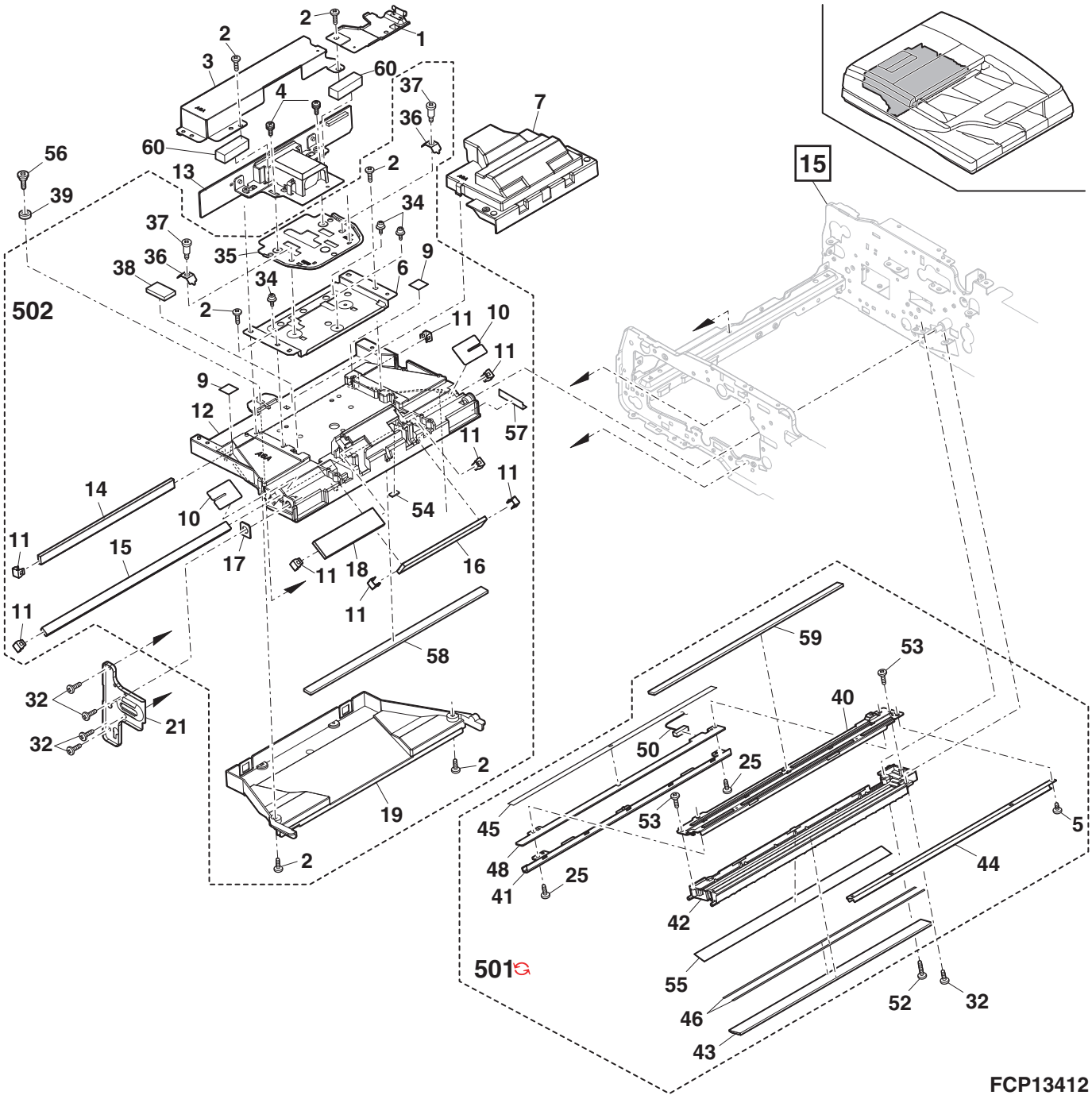

## 13 DSPF 排紙ユニット (DSPF Delivery unit)

| NO. | PARTS CODE | PRICE RANK | | NEW MARK | PART RANK | DESCRIPTION | |
|---|---|---|---|---|---|---|---|
| | | Ex. | Ja. | | | | |
| 1 | ML EVP 0983 FCZZ | AD | DJ | | C | PE lower actuator | PE 下ｱｸﾁｪｰﾀｰ |
| 2 | ML EVP 0989 FCZZ | AC | DJ | | C | PIN actuator | PIN ｱｸﾁｪｰﾀｰ |
| 3 | MSPRD 3477 FCZZ | AA | DJ | | C | Paper feed actuator spring | 給紙ｱｸﾁｪｰﾀｰｽﾌﾟﾘﾝｸﾞ |
| 4 | VHPGP 1S73P +－18 | AF | DS | | B | Photo sensor(GP1S73P) | ﾌｫﾄｾﾝｻｰ |
| 5 | XHBS 740P 08000 | AA | DD | | C | Screw(4×8) | ﾋﾞｽ |
| 6 | LHLDZ 1689 FCZ1 | AL | EB | | C | Delivery sensor holder | 排紙部ｾﾝｻｰﾎﾙﾀﾞｰ |
| 7 | LPiNS 0278 FCZZ | AB | DJ | | C | Spring pin(φ3-11) | ｽﾌﾟﾘﾝｸﾞﾋﾟﾝ |
| 8 | NROLR 1567 FCZZ | AV | FG | | C | DSPF transport roller 4 | DSPF 搬送ﾛｰﾗｰ 4 |
| 9 | XRESP 70－08000 | AA | DD | | C | E ring(E7) | E ﾘﾝｸﾞ |
| 10 | NPLYZ 0467 FCZZ | AD | DJ | | C | Transport pulley | 搬送ﾌﾟｰﾘｰ |
| 11 | NBRGY 0809 FCZ1 | AK | EQ | | C | Bearing(φ8-16) | 軸受 |
| 14 | LSTPP 0358 FCZZ | AF | DS | | C | Wire fixing stopper | ﾜｲﾔｰ押えｽﾄｯﾊﾟｰ |
| 15 | PRNGP 0081 FCZ1 | AB | DJ | | C | Resin ring(E4) | 樹脂ﾘﾝｸﾞ |
| 16 | NGERH 1688 FCZZ | AD | DJ | | C | Delivery gear | 排紙ｷﾞﾔ |
| 17 | NBRGY 0720 FCZ1 | AQ | EQ | | C | Bearing(φ6-13) | 軸受 |
| 18 | NROLR 1569 FCZZ | AQ | EQ | | C | DSPF delivery roller 3 | DSPF 排紙ﾛｰﾗｰ 3 |
| 19 | CPLTM 6229 FC04 | AE | DJ | | C | Lower door fulcrum plate | 下ﾄﾞｱ支点板 |
| 21 | CGLSP 0111 DS51 | AQ | EQ | | E | Protect glass unit | 保護ｶﾞﾗｽﾕﾆｯﾄ |
| 23 | LFiX－0625 FCZZ | AC | DJ | | C | White standard glass fixture | 白基準ｶﾞﾗｽ押え |
| 25 | LDAiU 0711 FCA2 | AP | EQ | N | D | White standard base | 白基準ﾍﾞｰｽ |
| 26 | NROLP 0896 FCZZ | AC | DD | | C | Transport follower roller | 搬送従動ﾛｰﾗｰ |
| 27 | NSFTP 3413 FCZZ | AC | DJ | | C | Follower collar shaft | 従動ｺﾛｼｬﾌﾄ |
| 28 | MSPRT 3523 FCZZ | AB | DJ | | C | Lower door follower spring | 下ﾄﾞｱ従動ｽﾌﾟﾘﾝｸﾞ |
| 29 | PCOVP 1937 FCZZ | AF | DS | | D | Follower roller cover | 従動ﾛｰﾗｰｶﾊﾞｰ |
| 30 | XEBS 740P 10000 | AA | DD | | C | Screw(4×10) | ﾋﾞｽ |
| 31 | PGiDM 2164 FCAZ | AQ | EQ | N | D | Delivery paper guide lower | 排紙ﾍﾟｰﾊﾟｰｶﾞｲﾄﾞ下 |
| 32 | LHLDZ 1696 FCZZ | AD | DJ | | C | Stamp holder | ｽﾀﾝﾌﾟﾎﾙﾀﾞｰ |
| 33 | XEBS 730P 08000 | AC | DD | | C | Screw(3×8) | ﾋﾞｽ |
| 34 | PCOVP 1824 FCZ1 | AE | DS | | D | Stamp cover | ｽﾀﾝﾌﾟｶﾊﾞｰ |
| 36 | MARMP 0350 FCZZ | AC | DJ | | C | Delivery pressure arm | 排紙加圧ｱｰﾑ |
| 37 | PGUMR 0315 FCZZ | AC | DJ | | C | Delivery rubber 15(Gray) | 蹴り出しｺﾞﾑ 15 |
| 38 | PGUMR 0333 FCZZ | AB | DJ | | C | Delivery rubber 19(Black) | 蹴り出しｺﾞﾑ 19 |
| 39 | NROLP 0011 QSZZ | AD | DJ | | C | Delivery follower roller | 排紙従動ﾛｰﾗｰ |
| 40 | NSFTZ 2989 FCZZ | AG | DS | | C | Delivery follower shaft | 排紙従動ｼｬﾌﾄ |
| 41 | MSPRT 3512 FCZZ | AC | DJ | | C | Delivery follower spring | 排紙従動ｽﾌﾟﾘﾝｸﾞ |
| 42 | PCOVP 1903 FCZ1 | AL | EB | | D | Delivery lower paper guide cover | 排紙下ﾍﾟｰﾊﾟｰｶﾞｲﾄﾞｶﾊﾞｰ |
| 43 | XHBS 730P 06000 | AC | DD | | C | Screw(3×6) | ﾋﾞｽ |
| 44 | LPLTM 6757 FCZZ | AC | DJ | | C | Arm fixing plate | ｱｰﾑ取付板 |
| 45 | DHAi－3925 FCPZ | AC | DJ | | C | DSPF earth harness(8.1) | DSPF ｱｰｽﾊｰﾈｽ |
| 46 | DHAi－3806 FCZ2 | AH | DX | | C | DSPF delivery sensor harness | DSPF 排紙ｾﾝｻｰﾊｰﾈｽ |
| 501 | CGiDM 2164 DS54 | AW | FG | N | E | Delivery lower paper guide unit | 排紙下ﾍﾟｰﾊﾟｰｶﾞｲﾄﾞﾕﾆｯﾄ |
| 502 | CHLDZ 1689 DS51 | AX | FG | | E | Delivery upper unit | 排紙上ﾕﾆｯﾄ |
| 503 | CROLR 1567 DS52 | AU | EZ | | E | DSPF transport 4 unit | DSPF 搬送 4 ﾕﾆｯﾄ |

## 13 DSPF 排紙ユニット (DSPF Delivery unit)

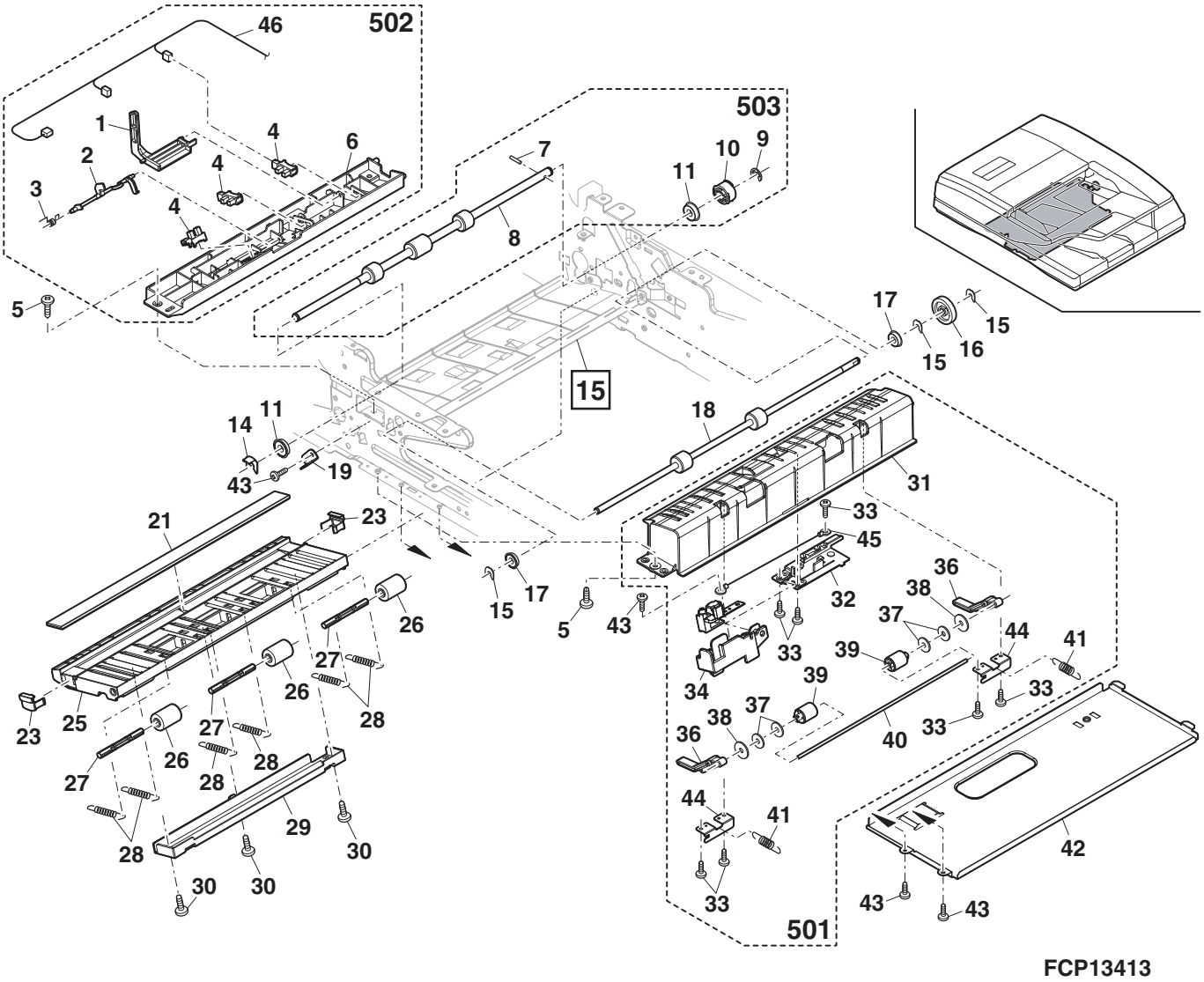


FCP13413

## 14 DSPF 駆動ユニット (DSPF Drive unit)

| NO. | PARTS CODE | PRICE RANK | | NEW MARK | PART RANK | DESCRIPTION | |
|---|---|---|---|---|---|---|---|
| | | Ex. | Ja. | | | | |
| 1 | NFANP0121FCPZ | BF | GN | N | B | Cooling fan | 冷却ファン |
| 2 | XHBS730P30000 | AB | DD | | C | Screw(3×30) | ビス |
| 3 | NPLYZ0463FCZZ | AH | DX | | C | Tension pulley | テンションプーリー |
| 4 | XRESP50-06000 | AA | DD | | C | E ring(E5) | E リング |
| 5 | CPLTM6994FC01 | AF | DS | | C | Tension plate 2 | テンションプレート2 |
| 6 | NBRGY0809FCZ1 | AK | EQ | | C | Bearing(ϕ8-16) | 軸受 |
| 7 | NBRGY0934FCZZ | AH | DX | | C | Bearing(ϕ6-10) | 軸受 |
| 8 | NBLTH0467FCZZ | AE | DJ | | B | DSPF transport drive belt | DSPF 搬送駆動ベルト |
| 9 | NPLYZ0464FCZZ | AE | DJ | | C | PS idle pulley | PS アイドルプーリー |
| 10 | XHBS730P08KS0 | AC | DD | | C | Screw(3×8KS) | ビス |
| 11 | RMOTS0938FCP2 | BB | GD | | B | DSPF transport motor | DSPF 搬送モーター |
| 12 | XHBS740P08000 | AA | DD | | C | Screw(4×8) | ビス |
| 13 | XHBS730P06000 | AC | DD | | C | Screw(3×6) | ビス |
| 14 | MSPRT3491FCZZ | AC | DJ | | C | Tension spring | テンションスプリング |
| 15 | CFRM-1202FC02 | AM | EG | | D | Drive transport frame | 駆動搬送フレーム |
| 16 | CPLTM6649FC03 | AF | DS | | C | Tension plate | テンションプレート |
| 17 | NBRGY0731FCZ1 | AM | EQ | | C | Bearing(ϕ5-8) | 軸受 |
| 18 | NPLYZ0465FCZZ | AE | DJ | | C | Transport idle pulley | 搬送アイドルプーリー |
| 19 | RMOTS0937FCP1 | BA | FX | | B | DSPF paper feed motor | DSPF 給紙モーター |
| 20 | CFRM-1201FC02 | AT | EZ | | D | Drive frame | 駆動フレーム |
| 21 | LHLDW7008XCZZ | AB | DD | | C | Wire saddle(LWS-1S) | ワイヤーサドル |
| 22 | PCOVP2395FCZZ | AB | DD | | C | Clutch rotation stopper cover | クラッチ回り止めカバー |
| 23 | RMOTS0939FCPZ | BA | FX | | B | DSPF delivery motor | DSPF 排紙モーター |
| 24 | RMOTS1007FCPZ | BD | GJ | | B | DSPF lift up motor | DSPF リフトアップモーター |
| 25 | NPLYZ0469FCZZ | AH | DX | | C | Transport joint pulley | 搬送連結プーリー |
| 26 | NGERH1778FCZZ | AP | EQ | | C | Gear(44T) | ギヤ |
| 28 | NBLTH0426FCZZ | AF | DS | | B | Belt(60S2M126) | ベルト |
| 29 | NGERH1777FCZZ | AN | EQ | | C | Pulley 49 gear(27T/20T) | プーリー 49 ギヤ |
| 30 | NGERH0104QSZZ | AE | DJ | | C | Gear(13T/42T) | ギヤ |
| 31 | XRESP20-04000 | AA | DD | | C | E ring(E2) | E リング |
| 32 | NGERH1566FCZZ | AE | DS | | C | Gear(45/23) | ギヤ |
| 33 | NGERH0103QSZZ | AE | DJ | | C | Gear(54T/13T) | ギヤ |
| 35 | NGERH1687FCZZ | AE | DJ | | C | Delivery idle gear | 排紙アイドルギヤ |
| 36 | XRESP30-05000 | AA | DD | | C | E ring(E3) | E リング |
| 37 | NBRGC0632FCZ1 | AE | DS | | C | Bearing(ϕ8-16) | 軸受 |
| 38 | NBRGC0879FCZZ | AC | DJ | | C | Bearing(ϕ6-10) | 軸受 |
| | (Unit) | | | | | | |
| 901 | CFRM-1202DS54 | BG | GT | | E | DSPF drive transport unit | DSPF 駆動搬送ユニット |
| 902 | CFRM-1201DS55 | BH | GX | | E | DSPF drive unit | DSPF 駆動ユニット |

## 14 DSPF 駆動ユニット (DSPF Drive unit)

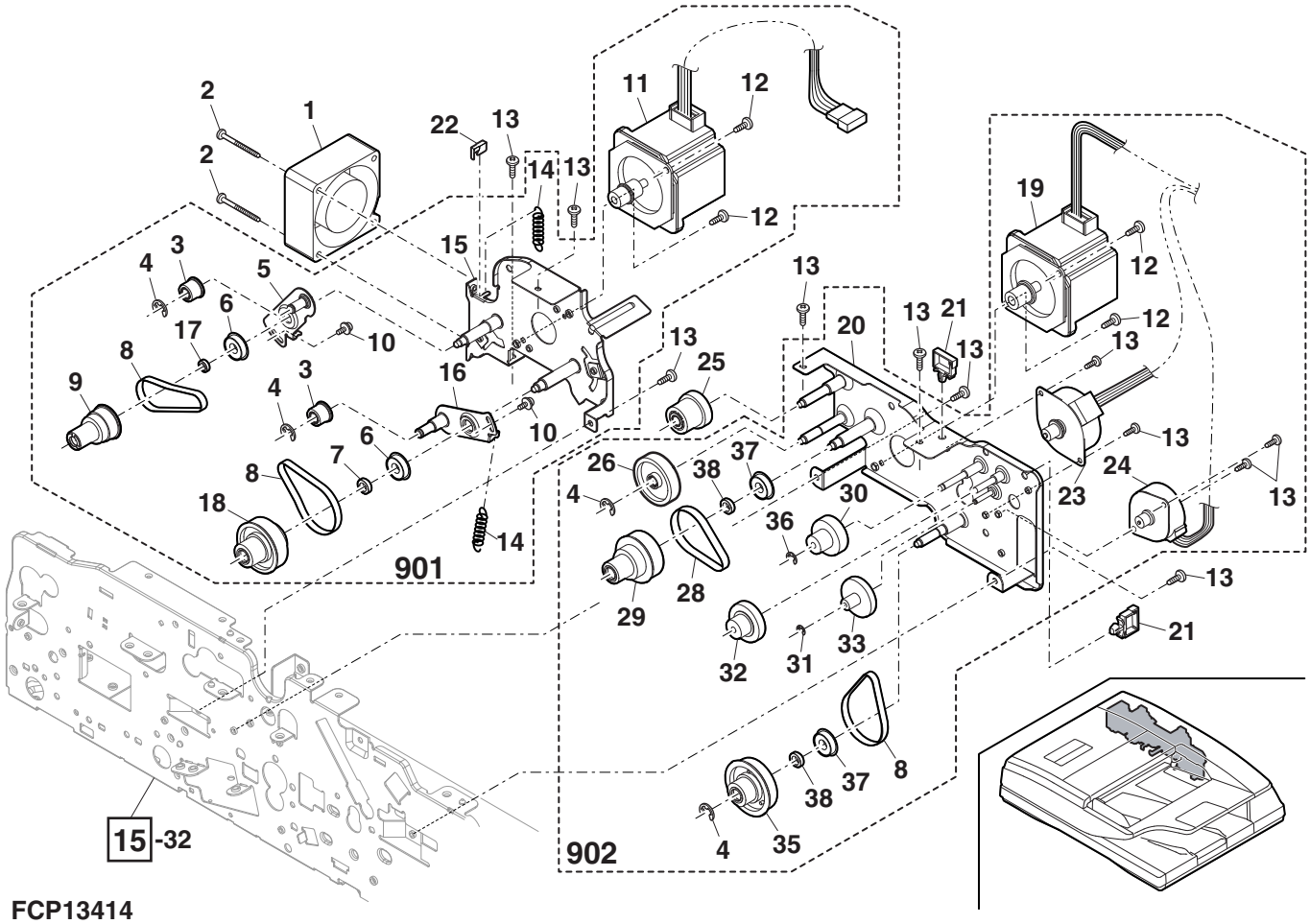


FCP13414

## 15 DSPF フレーム部 (DSPF Frame section)

| NO. | PARTS CODE | Inter-change | PRICE RANK Ex. | PRICE RANK Ja. | NEW MARK | PART RANK | DESCRIPTION | | TR No. | Effective time |
|---|---|---|---|---|---|---|---|---|---|---|
| 1 | PCÖVP1902FCZZ | | AF | DS | | D | Harness shield cover | ﾊｰﾈｽｼｰﾙﾄﾞｶﾊﾞｰ | | |
| 4 | CPWBX2027DS51 | | BU | NN | | E | DSPF control PWB | (Refer to Matrix) DSPF 制御基板 | | |
| | CPWBX2027DS53 | | | | N | E | DSPF control PWB | (Refer to Matrix) DSPF 制御基板 | | 1st lot |
| 5 | XHBS730P06000 | | AC | DD | | C | Screw(3×6) | ﾋﾞｽ | | |
| 10 | XEBS740P10000 | | AA | DD | | C | Screw(4×10) | ﾋﾞｽ | | |
| 11 | LPLTM8179FCZZ | | AN | EG | | C | DSPF control PWB fixing plate | DSPF 制御基板取付板 | | |
| 12 | XHBS740P08000 | | AA | DD | | C | Screw(4×8) | ﾋﾞｽ | | |
| 13 | GCAB-1127FCAZ | | AK | DX | | D | Rear cabinet lower | 後ｷｬﾋﾞ下 | | |
| 14 | LHLDZ1685FCZ1 | | AF | DS | | C | Cable holder RR | ｹｰﾌﾞﾙﾎﾙﾀﾞｰ RR | | |
| 17 | PGiDM2180FCA2 | | AK | DX | | D | Harness guide | ﾊｰﾈｽｶﾞｲﾄﾞ | | |
| 22 | MHNG-0239FCZZ | | BN | LE | | C | Hinge L | ﾋﾝｼﾞ L | | |
| 23 | MSPRT3490FCZZ | | AC | DJ | | C | Drive adjustment spring | 駆動調整ｽﾌﾟﾘﾝｸﾞ | | |
| 24 | CPLTM6648FC03 | | AF | DS | | C | Drive adjustment plate 1 | 駆動調整板 1 | | |
| 25 | XHBS730P08KS0 | | AC | DD | | C | Screw(3×8KS) | ﾋﾞｽ | | |
| 26 | NPLYZ0463FCZZ | | AH | DX | | C | Tension pulley | ﾃﾝｼｮﾝﾌﾟｰﾘｰ | | |
| 27 | XRESP50-06000 | | AA | DD | | C | E ring(E5) | E ﾘﾝｸﾞ | | |
| 28 | CPLTM6758FC02 | | AF | DS | | C | Drive adjustment plate 2 | 駆動調整板 2 | | |
| 29 | XBPS740P08KS0 | | AB | DD | | C | Screw(4×8KS) | ﾋﾞｽ | | |
| 30 | LBSHZ0366FCZZ | | AC | DJ | | C | Edge saddle(EDS0607U) | ｴｯｼﾞｻﾄﾞﾙ | | |
| 31 | PCÖVP1901FCAZ | | AD | DJ | | D | Interface harness cover | 中継ﾊｰﾈｽｶﾊﾞｰ | | |
| 32 | LFRM-1198FCZ1 | | AV | FG | | D | Rear frame | 後ﾌﾚｰﾑ | | |
| 33 | CPWBN1982FCE1 | | BG | GT | | E | DSPF driver PWB | DSPF ﾄﾞﾗｲﾊﾞｰ基板 | | |
| 34 | PSPÖ-0003FCPZ | | AC | DJ | | C | DSPF sponge | DSPF ｽﾎﾟﾝｼﾞ | | |
| 35 | PGiDM2175FCAZ | | AF | DS | | D | Interface harness guide | 中継ﾊｰﾈｽｶﾞｲﾄﾞ | | |
| 36 | MHNG-0240FCZZ | | BP | LP | | C | Hinge R | ﾋﾝｼﾞ R | | |
| 37 | LPLTM6654FCZZ | | AK | DX | | C | Optical joint plate | 光学連結板 | | |
| 38 | LHLDW1263FCZZ | | AC | DJ | | C | Edge saddle(EDS0607M) | ｴｯｼﾞｻﾄﾞﾙ | | |
| 39 | LPLTM6954FCZZ | | AR | EQ | | C | DSPF reinforce plate A | DSPF 補強板 A | | |
| 40 | NSFTZ2981FCZZ | | AK | DX | | C | Joint shaft | 連結ｼｬﾌﾄ | | |
| 41 | LBSHC0161FCZZ | | AB | DD | | C | Edge saddle | ｴｯｼﾞｻﾄﾞﾙ | | |
| 42 | PGiDH2179FCZZ | | AN | EG | | D | Delivery paper guide | 排紙ﾍﾟｰﾊﾟｰｶﾞｲﾄﾞ | | |
| 43 | PSHEP5407FCZZ | | AA | DJ | | C | Transport mylar | 搬送ﾏｲﾗｰ | | |
| 44 | PBRSS0232FCZ2 | | AE | DJ | | B | Delivery discharge brush | 排紙除電ﾌﾞﾗｼ | | |
| 45 | LSTYM0366FCZZ | | AN | EG | | C | Delivery section stay | 排紙部ｽﾃｲ | | |
| 46 | XBPS730P08KS0 | | AB | DD | | C | Screw(3×8KS) | ﾋﾞｽ | | |
| 47 | LPLTM6650FCZZ | | AD | DJ | | C | Lift up plate | ﾘﾌﾄｱｯﾌﾟﾌﾟﾚｰﾄ | | |
| 48 | NSFTZ2980FCZZ | | AN | EG | | C | Lift up shaft | ﾘﾌﾄｱｯﾌﾟｼｬﾌﾄ | | |
| 49 | PCÖVP1898FCZZ | | AC | DJ | | D | Lift up shaft cover | ﾘﾌﾄｱｯﾌﾟｼｬﾌﾄｶﾊﾞｰ | | |
| 50 | XRESP70-08000 | | AA | DD | | C | E ring(E7) | E ﾘﾝｸﾞ | | |
| 51 | NGERH1378FCZZ | | AD | DJ | | C | Fan type gear | 扇型ｷﾞﾔ | | |
| 52 | NBRGC0133FCZ1 | | AC | DJ | | C | Bearing(φ8) | 軸受 | | |
| 53 | MSPRD3239FCZ1 | | AF | DS | | C | Lift spring | ﾘﾌﾄｽﾌﾟﾘﾝｸﾞ | | |
| 54 | LPiNS7062SCZZ | | AA | DD | | C | Spring pin | ｽﾌﾟﾘﾝｸﾞﾋﾟﾝ | | |
| 55 | LX-BZ0931FCZZ | | AC | DD | | C | Step screw(M3) | 段ﾋﾞｽ | | |
| 56 | MLEVP0994FCAZ | | AC | DD | | C | Book detect lever | ﾌﾞｯｸ検知ﾚﾊﾞｰ | | |
| 57 | MSPRT3492FCZZ | | AC | DJ | | C | Book detect lever spring ﾚﾊﾞｰｽﾌﾟﾘﾝｸﾞ | ﾌﾞｯｸ検知 | | |
| 58 | VHPSG2A141+-1 | | AF | DS | | B | Photo sensor(SG2A141) | ﾌｫﾄｾﾝｻｰ | | |
| 59 | LHLDZ1694FCAZ | | AD | DJ | | C | Book detect holder | ﾌﾞｯｸ検知ﾎﾙﾀﾞｰ | | |
| 60 | LFRM-1197FCZZ | | AS | EZ | | D | Front frame | 前ﾌﾚｰﾑ | | |
| 61 | PSHEZ5553FCPZ | | AH | DX | | C | Earth sheet DSPF | ｱｰｽｼｰﾄ DSPF | | |
| 63 | LHLDW1426FCZZ | | AC | DJ | | C | Mini clamp(YMW-16) | ﾐﾆｸﾗﾝﾌﾟ | | |
| 64 | PSHEZ5449FCZ2 | | AC | DJ | | C | Delivery sheet RSPF(38) | 排紙ｼｰﾄ RSPF | | |
| 65 | PSHEZ0448QSZZ | | AA | DJ | | C | Optical bottom mylar | 光学底ﾏｲﾗｰ | | |
| 66 | LDAiU0713FCZZ | | AC | DJ | | D | Lower door fixing base R | 下ﾄﾞｱ固定台 R | | |
| 67 | LPLTM6955FCZZ | | AC | DJ | | C | DSPF reinforce plate B | DSPF 補強板 B | | |
| 68 | CPLTM6229FC04 | | AE | DJ | | C | Lower door fulcrum plate | 下ﾄﾞｱ支点板 | | |
| 69 | NSFTZ2970FCZZ | | AD | DJ | | C | White standard plate support shaft | 白基準板支持軸 | | |
| 501 | CHLDZ1694DS53 | | AK | DX | | E | Book detect holder | ﾌﾞｯｸ検知ﾎﾙﾀﾞｰ | | |
| 502 | CGiDH2179DS51 | | AT | EZ | | E | Delivery paper guide unit ﾍﾟｰﾊﾟｰｶﾞｲﾄﾞﾕﾆｯﾄ | 排紙 | | |
| 504 | CFRM-1198DS52 | | BA | FX | | E | Rear frame unit | 後ﾌﾚｰﾑﾕﾆｯﾄ | | |

## 15 DSPF フレーム部 (DSPF Frame section)

## Matrix

| No.4 | DSPF 制御基板 (DSPF control PWB) | | | | | | | | | | | | |
|---|---|---|---|---|---|---|---|---|---|---|---|---|---|
| PARTS CODE | MX-7040N MX-6240N | | MX-6540FN | | | | | | | | | | |
| | Americas, Europe Australia Asia South Africa | Taiwan | Japan（日本） | | | | | | | | | | |
| CPWBX2027DS51 | 1st lot | | 1st lot | | | | | | | | | | |
| CPWBX2027DS53 | | 1st lot | | | | | | | | | | | |

## 15 DSPF フレーム部 (DSPF Frame section)

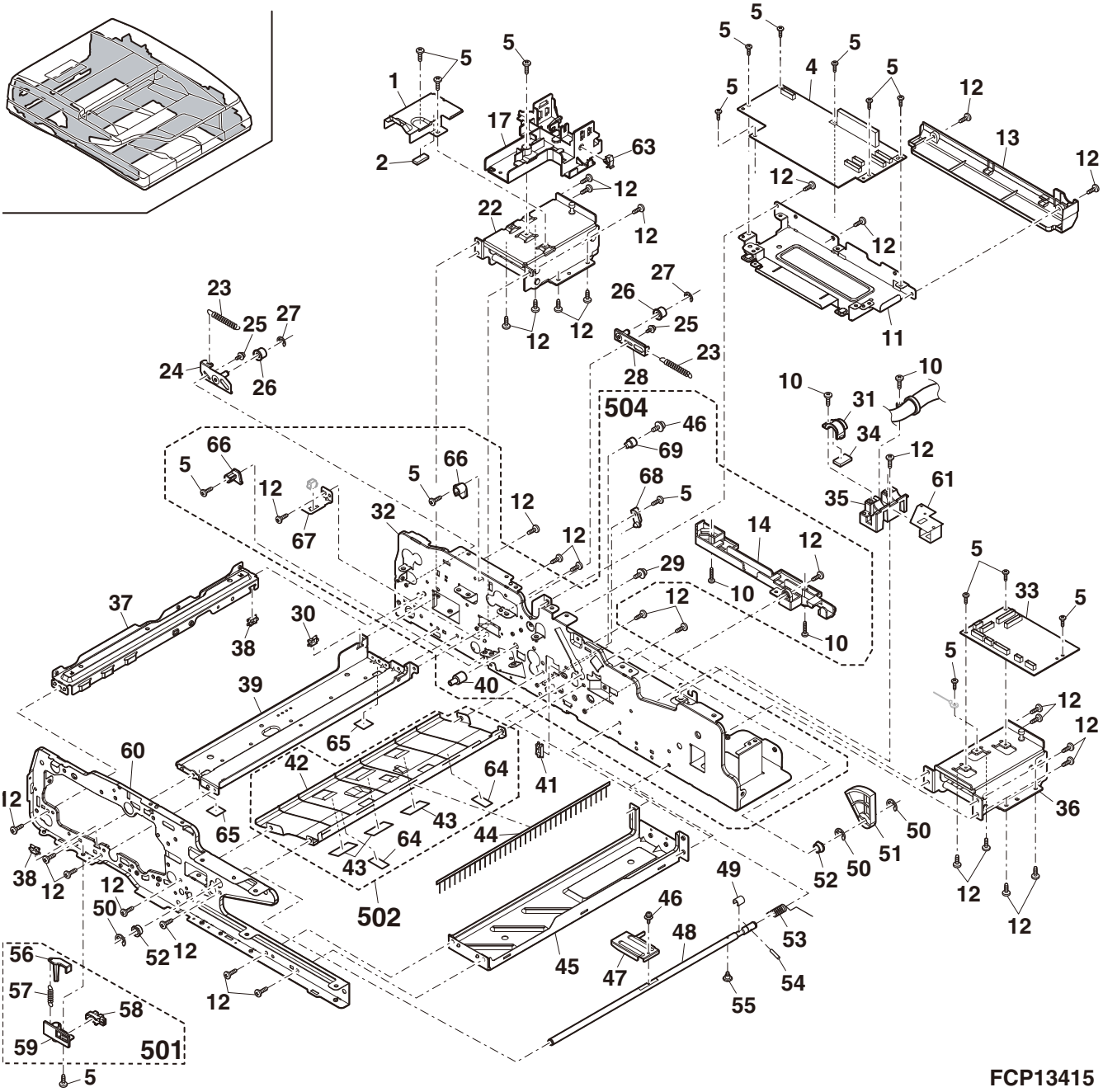

## 16 DSPF ﾊｰﾈｽ部 (DSPF Wiring section)

| NO. | PARTS CODE | Inter-change | PRICE RANK Ex. | PRICE RANK Ja. | NEW MARK | PART RANK | DESCRIPTION | TR No. | Effective time |
|---|---|---|---|---|---|---|---|---|---|
| 1 | DHAi-4375FCPZ | | AT | EZ | | C | Clutch interface harness ｸﾗｯﾁ中継ﾊｰﾈｽ | | |
| 2 | DHAi-5096FCPZ | | BR | LP | | C | DSPF interface harness DSPF 中継ﾊｰﾈｽ | | |
| 3 | DHAi-4816FCPZ | | BK | HG | | C | Control sensor harness ｺﾝﾄﾛｰﾙｾﾝｻｰﾊｰﾈｽ | | |
| 4 | DHAi-4817FCPZ | | BG | GT | | C | DSPF CCD harness DSPF CCD ﾊｰﾈｽ | | |
| 5 | DHAi-4820FCPZ | | AR | EQ | | C | Driver interface harness ﾄﾞﾗｲﾊﾞｰ中継ﾊｰﾈｽ | | |
| 7 | DHAi-3806FCZ2 | | AH | DX | | C | DSPF delivery sensor harness DSPF排紙ｾﾝｻｰﾊｰﾈｽ | | |
| 8 | RCORF0021QSZZ | | AK | DX | | C | Core ｺｱ | | |
| 9 | RCORF0018QSZZ | - | AR | EQ | | C | Core [Taiwan] ｺｱ | | 1st lot |

## 16 DSPF ﾊｰﾈｽ部 (DSPF Wiring section)

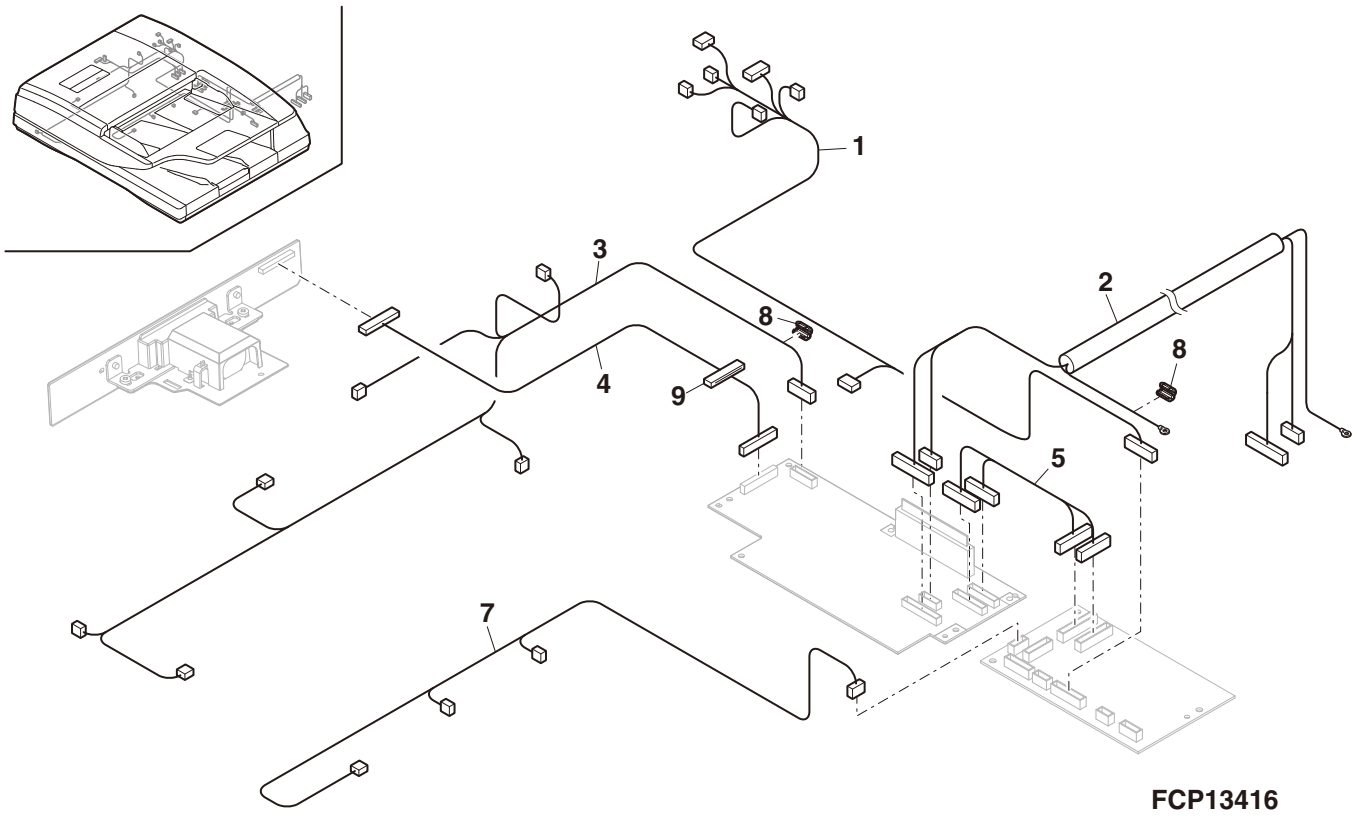

## 17 原稿検知ﾕﾆｯﾄ (Document detect unit)

| NO. | PARTS CODE | Inter-change | PRICE RANK Ex. | PRICE RANK Ja. | NEW MARK | PART RANK | DESCRIPTION | | TR No. | Effective time |
|---|---|---|---|---|---|---|---|---|---|---|
| 1 | NSFTZ1805FCPZ | | AM | EG | | C | Document detect fulcrum shaft | 原稿検知支点軸 | | |
| 2 | XRESP30-06000 | | AA | DD | | C | E ring(E3) | E ﾘﾝｸﾞ | | |
| 3 | MSPRT1563FCZZ | | AC | DD | | C | Document detect spring | 原稿検知 ｽﾌﾟﾘﾝｸﾞ | | |
| 4 | XBPS730P06KS0 | | AB | DD | | C | Screw(3×6KS) | ﾋﾞｽ | | |
| 5 | MARMP0148FCA4 | | AN | EG | N | C | Document detect arm lower | 原稿検知ｱｰﾑ下 | | |
| 6 | PSLDP0183FCZZ | | AD | DJ | | C | Document detect shading plate N | 原稿検知遮光板 N | | |
| 7 | CPWBF1453FCE6 | | AW | FG | N | E | ORS LED PWB | ORS LED 基板 | | |
| 8 | LHLDZ1085FCA4 | | AE | DJ | N | C | Document detect fulcrum holder | 原稿検知支点 ﾎﾙﾀﾞｰ | | |
| 9 | LBSHZ0364FCA1 | | AC | DD | N | C | Document detect bush | 原稿検知ﾌﾞｯｼｭ | | |
| 10 | MARMP0147FCA4 | | AN | EG | N | C | Document detect arm upper | 原稿検知ｱｰﾑ上 | | |
| 11 | XEPS730P05000 | | AA | DD | | C | Screw(3×5) | ﾋﾞｽ | | |
| 12 | GCAB-1440FCAZ | | AV | FG | N | D | Upper cabinet rear | 上ｷｬﾋﾞ後 | | |
| | GCAB-1440FCA1 | 3 | AV | FG | N | D | Upper cabinet rear | 上ｷｬﾋﾞ後 | | 12/Mar |
| 13 | XEBS730P08000 | | AC | DD | | C | Screw(3×8) | ﾋﾞｽ | | |
| 14 | CARMP0147DS60 | | AZ | FQ | N | E | Document detector luminescence unit | 原稿検知発光 ﾕﾆｯﾄ | | |
| 15 | XHBS730P06000 | | AC | DD | | C | Screw(3×6) | ﾋﾞｽ | | |

## 17 原稿検知ﾕﾆｯﾄ (Document detect unit)

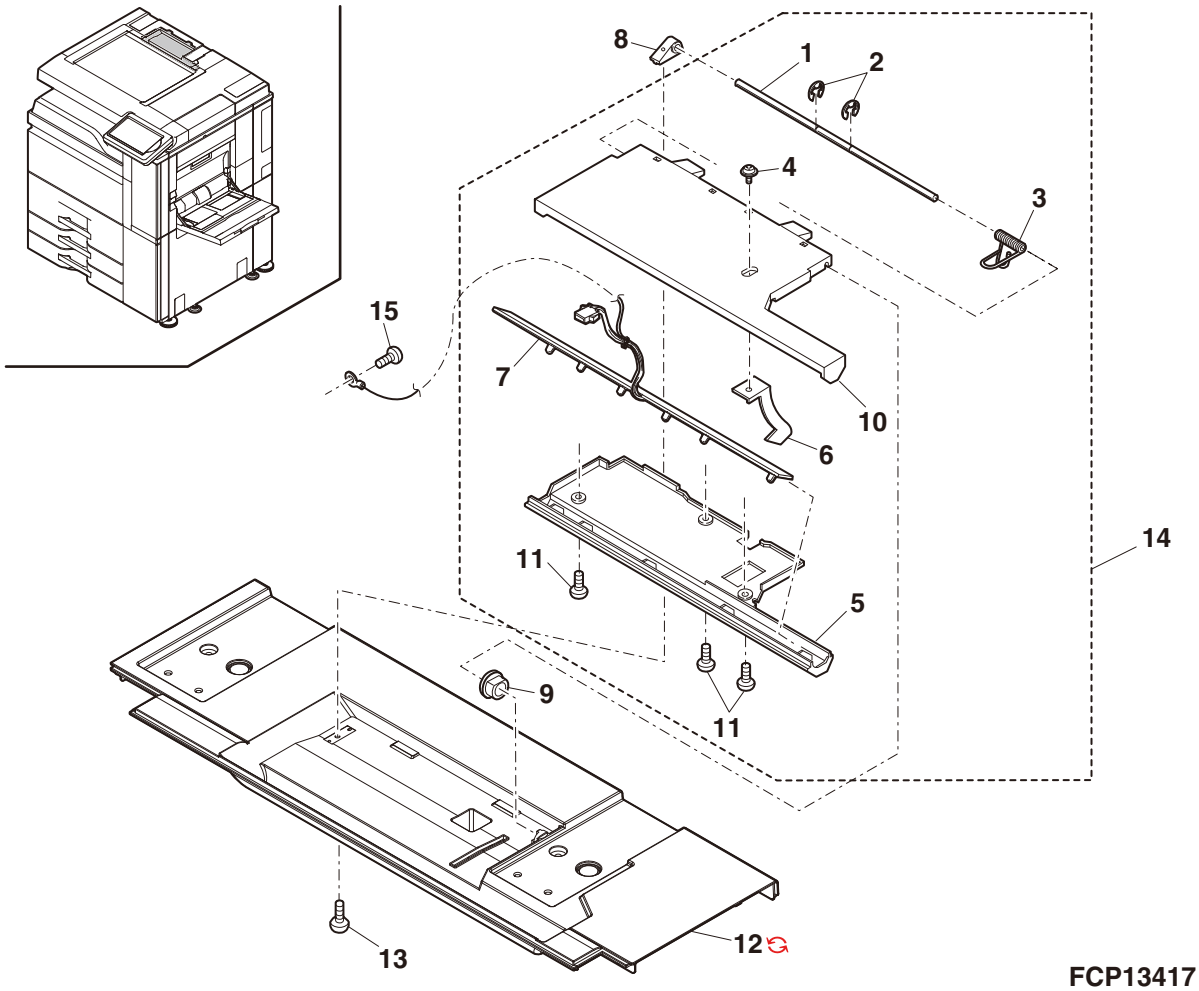

## 18 ｽｷｬﾅｰﾕﾆｯﾄ 1(Scanner unit 1)

| NO. | PARTS CODE | Inter-change | PRICE RANK Ex. | PRICE RANK Ja. | NEW MARK | PART RANK | DESCRIPTION | TR No. | Effective time |
|---|---|---|---|---|---|---|---|---|---|
| 2 | XHBS730P04000 | | AA | DD | | C | Screw(3×4) ﾋﾞｽ | | |
| 3 | QCNW-0269FCPZ | | AV | FG | | C | CCD-F FFC (Refer to Matrix) CCD-F FFC | | |
| | QCNW-0279FCPZ | | | | N | C | CCD-F FFC (Refer to Matrix) CCD-F FFC | | 1st lot |
| 5 | PBOX-0199FCZZ | | AL | EB | | D | Dark box 暗箱 | | |
| 7 | PCOVP2185FCZZ | | AG | DS | | D | FFC cover FFC ｶﾊﾞｰ | | |
| 8 | CPLTM7621DS72 | | BV | RB | | B | Lens unit ﾚﾝｽﾞﾕﾆｯﾄ | | |
| 9 | XHBS730P08KS0 | | AC | DD | | C | Screw(3×8KS) ﾋﾞｽ | | |
| 11 | LPLTM8391FCZZ | | AE | DS | | C | FAN duct fixing plate FAN ﾀﾞｸﾄ取付板 | | |
| 12 | XHBS740P06000 | | AA | DD | | C | Screw(4×6) ﾋﾞｽ | | |
| 14 | PCOVP2003FCZZ | | AK | EB | | D | SCN PWB cover SCN 基板ｶﾊﾞｰ | | |
| 17 | LHLDW1285FCZZ | | AC | DJ | | C | Edge saddle(EDS-2) ｴｯｼﾞｻﾄﾞﾙ | | |
| 18 | LPLTM6523FCZZ | | AF | DS | | C | OC reinforce plate OC 補強板 | | |
| 19 | LPLTM6522FCZZ | | AK | DX | | C | OC fixing plate OC 取付板 | | |
| 21 | DHAi-4201FCP1 | | BB | DX | | C | SCN-WH harness 2 SCN-WH ﾊｰﾈｽ | | |
| 22 | XHBS740P08000 | | AA | DD | | C | Screw(4×8) ﾋﾞｽ | | |
| 23 | LBSHC0321FCZZ | | AA | DJ | | C | Edge protect(L=30) ｴｯｼﾞ保護材 | | |
| 24 | PGiDM2111FCZZ | | AC | DJ | | D | Sensor guide ｾﾝｻｰｶﾞｲﾄﾞ | | |
| 25 | VHPLG217L5S-1 | | AM | EG | | B | Photo sensor(LG217L-5S) ﾌｫﾄｾﾝｻｰ | | |
| 31 | VHPLG217L5A-1 | | AM | EG | | B | Photo sensor(LG217L-5A) ﾌｫﾄｾﾝｻｰ | | |
| 32 | XBBS740P14000 | | AB | DD | | C | Screw(4×14) ﾋﾞｽ | | |
| 36 | DHAi-5027FCPZ | | BT | NE | | C | MHPS harness MHPS ﾊｰﾈｽ | | |
| 39 | PSHEP5560FCZ1 | | AF | DJ | | C | Scanner right mylar ｽｷｬﾅｰ右ﾏｲﾗｰ | | |
| 42 | LBNDJ0071FCZZ | | AC | DJ | | C | Band(RSG-100) ﾊﾞﾝﾄﾞ | | |
| 43 | PMLT-1789FCZZ | | AC | DJ | | C | CCD cushion CCD ｸｯｼｮﾝ | | |
| 44 | PMLT-1791FCZZ | | AA | DJ | | C | T glass lower cushion T ｶﾞﾗｽ下ｸｯｼｮﾝ | | |
| 45 | LHLDZ2270FCZZ | | AH | DX | | C | I/F cable holder lower I/F ｹｰﾌﾞﾙﾎﾙﾀﾞｰ下 | | |
| 46 | PCOVP1901FCAZ | | AD | DJ | | D | Interface harness cover 中継ﾊｰﾈｽｶﾊﾞｰ | | |
| 47 | XEBS740P10000 | | AA | DD | | C | Screw(4×10) ﾋﾞｽ | | |
| 51 | XHBS730P06000 | | AC | DD | | C | Screw(3×6) ﾋﾞｽ | | |
| 56 | PMLT-1896FCZZ | | AB | DJ | | C | Rail cushion ﾚｰﾙｸｯｼｮﾝ | | |
| 58 | CDAiU0786FC05 | | | | N | D | Optical base plate 光学台板 | | |
| 61 | PDUC-0291FCZZ | | AL | EB | | C | FAN duct FAN ﾀﾞｸﾄ | | |
| 62 | NFANP0020QSPZ | | AP | EQ | | B | FAN FAN | | |
| 63 | LX-BZ0030QSPZ | | AC | DD | | C | Screw ﾋﾞｽ | | |
| ⚠ 64 | RHETP0127FCZZ | | AX | FG | | B | Dehumidification heater [Japan( 日本 )] 除湿ﾋｰﾀｰ | | |
| 65 | LPLTM6923FCZZ | | AG | DX | | C | Heater fixing plate [Japan( 日本 )] ﾋｰﾀｰ取付板 | | |
| 66 | LBNDJ0013FCZ1 | | AE | DJ | | C | Band [Japan( 日本 )] ﾊﾞﾝﾄﾞ | | |
| 67 | LBNDJ0043FCP1 | | AB | DJ | | C | Snap band [Japan( 日本 )] ｽﾅｯﾌﾟﾊﾞﾝﾄﾞ | | |
| 68 | LHLDW7011XCZZ | | AB | DD | | C | Wire suddle(YMC-05-0) [Japan( 日本 )] ﾜｲﾔｰｻﾄﾞﾙ | | |
| 69 | LX-BZ1041FCZZ | | AB | DD | | C | Screw [Japan( 日本 )] ﾋﾞｽ | | |
| 70 | XBBS740P06000 | | AA | DD | | C | Screw(4×6) [Japan( 日本 )] ﾋﾞｽ | | |
| 71 | DHAi-5119FCPZ | | BR | LX | | C | OC FAN harness OC FAN ﾊｰﾈｽ | | |
| 72 | LPLTM8405FCZZ | | AF | DS | | C | Exterior fixing plate 外装取付板 | | |
| 73 | PSPO-0004FCPZ | | AD | DJ | | C | Cushion ｽﾎﾟﾝｼﾞ | | |
| 74 | PSHEZ5554FCPZ | | AG | DS | | C | Earth sheet ｱｰｽｼｰﾄ | | |
| 75 | PSHEP5580FCZZ | | AC | DJ | | C | PWB cover mylar 基板ｶﾊﾞｰﾏｲﾗｰ | | |
| 101 | PMLT-2075FCZZ | | AC | DD | | C | FAN duct cushion B ﾌｧﾝﾀﾞｸﾄﾓﾙﾄ B | | |
| 102 | PMLT-2076FCZZ | | AB | DD | | C | FAN duct cushion A ﾌｧﾝﾀﾞｸﾄﾓﾙﾄ A | | |
| 103 | PSHEP6461FCZZ | | | | N | C | Scanner left rear mylar ｽｷｬﾅｰ左後ﾏｲﾗｰ | | |
| 106 | XEBS730P08000 | | AC | DD | | C | Screw(3×8) ﾋﾞｽ | | |
| 107 | PGSK-0082FCPZ | | AD | DJ | | C | Gasket(L=85) [Taiwan] ｶﾞｽｹｯﾄ | | 1st lot |
| 108 | RCORF0018QSZZ | | AR | EQ | | C | Core [Taiwan] ｺｱ | | 1st lot |
| 109 | DHAi-5329FCPZ | | | | N | C | Mesh Harnes [Taiwan] ﾒｯｼｭﾊｰﾈｽ | | 1st lot |
| 110 | LBNDJ0013FCZ1 | | AE | DJ | | C | Band [Taiwan] ﾊﾞﾝﾄﾞ | | 1st lot |
| 111 | PTPE-0038QSZZ | | AF | DS | | C | Optical shield Tape [Taiwan] 光学ｼｰﾙﾄﾞﾃｰﾌﾟ | | 1st lot |
| 501 | DUNT-7788DS13 | | | | N | E | Scanner heater unit [Japan( 日本 )] ｽｷｬﾅｰﾋｰﾀｰﾕﾆｯﾄ | | |
| | (Unit) | | | | | | | | |
| 901 | DUNT-8756DS12 | | CH | UM | | E | Optical unit(Refer to Matrix)[Include Block[1]-10,[17],[19]-901,[20]] 光学ﾕﾆｯﾄ | | |
| | DUNT-8756DS11 | | CG | UM | | E | Optical unit(Refer to Matrix)[Include Block[1]-10,[17],[19]-901,[20]] 光学ﾕﾆｯﾄ | | |
| | DUNT-8756DS13 | | | | N | E | Optical unit(Refer to Matrix)[Include Block[1]-10,[17],[19]-901,[20]] 光学ﾕﾆｯﾄ | | 1st lot |

18 ｽｷｬﾅｰﾕﾆｯﾄ 1(Scanner unit 1)

## Matrix

| No.3 | CCD-F FFC (CCD-F FFC) | | | | | | | | | | | | |
|---|---|---|---|---|---|---|---|---|---|---|---|---|---|
| PARTS CODE | MX-7040N MX-6240N | | MX-6540FN | | | | | | | | | | |
| | Americas, Europe, Australia, Asia, South Africa | Taiwan | Japan（日本） | | | | | | | | | | |
| QCNW-0269FCPZ | 1st lot | | 1st lot | | | | | | | | | | |
| QCNW-0279FCPZ | | 1st lot | | | | | | | | | | | |

| No.901 | 光学ﾕﾆｯﾄ (Optical unit) | | | | | | | | | | | | |
|---|---|---|---|---|---|---|---|---|---|---|---|---|---|
| PARTS CODE | MX-7040N MX-6240N | | MX-6540FN | | | | | | | | | | |
| | Americas, Europe, Australia, Asia, South Africa | Taiwan | Japan（日本） | | | | | | | | | | |
| DUNT-8756DS12 | | | 1st lot | | | | | | | | | | |
| DUNT-8756DS11 | 1st lot | | | | | | | | | | | | |
| DUNT-8756DS13 | | 1st lot | | | | | | | | | | | |

## 18 ｽｷｬﾅｰﾕﾆｯﾄ 1(Scanner unit 1)

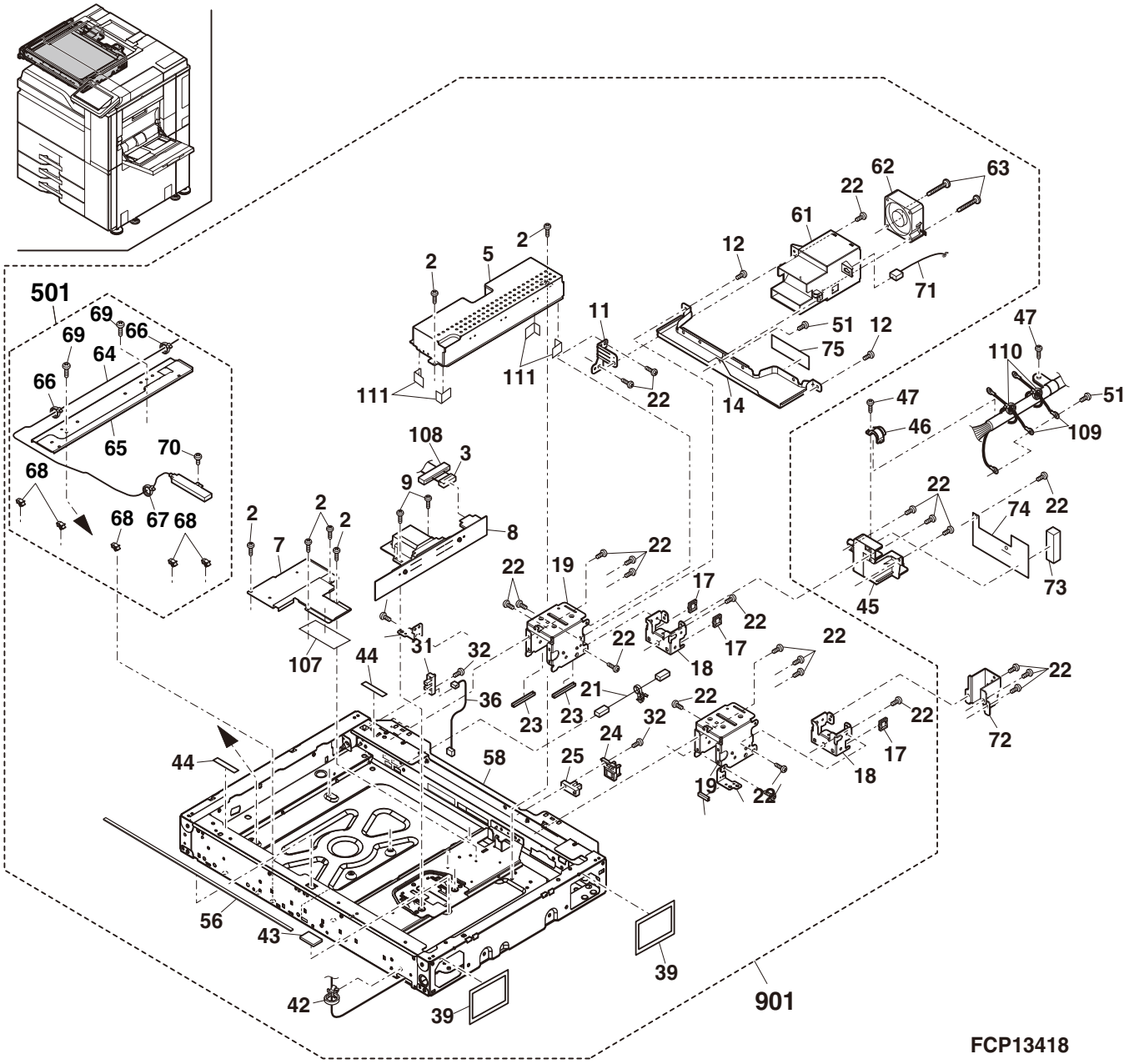

## 19 ｽｷｬﾅｰﾕﾆｯﾄ 2(Scanner unit 2)

| NO. | PARTS CODE | Inter-change | PRICE RANK Ex. | PRICE RANK Ja. | NEW MARK | PART RANK | DESCRIPTION | | TR No. | Effective time |
|---|---|---|---|---|---|---|---|---|---|---|
| 1 | PWiR-0191FCT2 | | AP | EQ | | C | MB wire R | MBﾜｲﾔｰR | | |
| | PWiR-0191FCT3 | 1 | AN | EQ | N | C | MB wire R | MBﾜｲﾔｰR | | Aug/12 |
| 2 | CHLDZ1663FC32 | | BC | GJ | N | E | 2nd,3rd mirror unit | 2nd,3rdﾐﾗｰﾕﾆｯﾄ | | |
| 3 | PGiDM1890FCZ1 | | AC | DJ | | D | CL guide | CLｶﾞｲﾄﾞ | | |
| 4 | XBBS740P06000 | | AA | DD | | C | Screw(4×6) | ﾋﾞｽ | | |
| 5 | LHLDZ1505FCZZ | | AC | DJ | | C | Wire holder | ﾜｲﾔｰﾎﾙﾀﾞｰ | | |
| 7 | NPLYZ0401FCZZ | | BB | GD | | C | Pulley(50T) | ﾌﾟｰﾘｰ | | |
| 8 | NBLTH0440FCZZ | | AS | EQ | | B | Winder drive belt | 巻取り駆動ﾍﾞﾙﾄ | | |
| 9 | LX-BZ0049FCPZ | | AB | DD | | C | Screw(4×6) | ﾋﾞｽ | | |
| 10 | NPLYZ0506FCZZ | | AL | EB | | C | Winder pulley | 巻取りﾌﾟｰﾘｰ | | |
| 11 | NSFTZ2694FCPZ | | AY | FQ | | C | Winder drive shaft | 巻取り駆動軸 | | |
| 12 | PWiR-0192FCT2 | | AP | EQ | | C | MB wire F | MBﾜｲﾔｰF | | |
| | PWiR-0192FCT3 | 1 | AN | EQ | | C | MB wire F | MBﾜｲﾔｰF | | Aug/12 |
| 13 | XHBS730P06000 | | AC | DD | | C | Screw(3×6) | ﾋﾞｽ | | |
| 14 | RMOTS0920FCPZ | | BF | GN | | B | Scanner motor | ｽｷｬﾅｰﾓｰﾀｰ | | |
| 15 | MSPRT3388FCZZ | | AC | DJ | | C | Mirror motor spring | ﾐﾗｰﾓｰﾀｰｽﾌﾟﾘﾝｸﾞ | | |
| 16 | CPLTM6520FC01 | | AH | DX | | C | Mirror motor fixing plate | ﾐﾗｰﾓｰﾀｰ取付板 | | |
| 17 | NGERH1647FCZZ | | AE | DJ | | C | Mirror motor idle gear | ﾐﾗｰﾓｰﾀｰｱｲﾄﾞﾙｷﾞﾔ | | |
| 18 | XRESP70-08000 | | AA | DD | | C | E ring(E7) | Eﾘﾝｸﾞ | | |
| 23 | NBRGY0466FCZ1 | | AK | DX | | C | Bearing(ϕ8-16) | 軸受 | | |
| 24 | LFiX-0537FCAZ | | AD | DJ | | C | Harness fixture | ﾊｰﾈｽ押え | | |
| 25 | LDAiU0610FCAZ | | AE | DJ | | D | Harness fixing base | ﾊｰﾈｽ押えﾍﾞｰｽ | | |
| 26 | XHBS740P06000 | | AA | DD | | C | Screw(4×6) | ﾋﾞｽ | | |
| 28 | PGUMS0283FCZ2 | | AA | DJ | | C | Table glass gum | ﾃｰﾌﾞﾙｶﾞﾗｽｺﾞﾑ | | |
| 30 | NPLYZ0006QSZ1 | | AD | DJ | | C | L pulley | Lﾌﾟｰﾘｰ | | |
| 31 | PSHEZ5768FCZZ | | AA | DJ | | C | Screw protect sheet | ﾋﾞｽ保護ｼｰﾄ | | |
| 32 | NPLYZ0005QSZZ | | AG | DX | | C | Pulley | 定ﾌﾟｰﾘｰ | | |
| 33 | LRALM0225FCZZ | | AG | DS | | C | MB-B rail R | MB-Bﾚｰﾙ R | | |
| 34 | LRALM0226FCZZ | | AE | DS | | C | MB-B rail F | MB-Bﾚｰﾙ F | | |
| 35 | LHLDZ1945FCZZ | | AG | DS | | C | ORS PWB holder | 受光基板ﾎﾙﾀﾞｰ | | |
| 36 | CPWBF1454FCE3 | | AY | FQ | | E | ORS PWB | 受光基板 | | |
| 37 | XEPS740P06000 | | AB | DD | | C | Screw(4×6) | ﾋﾞｽ | | |
| 38 | LX-BZ2106ACZZ | | AB | DD | | C | Screw(2×4) | ﾋﾞｽ | | |
| 40 | LBNDJ0071FCZZ | | AC | DJ | | C | Band(RSG-100) | ﾊﾞﾝﾄﾞ | | |
| 41 | LX-BZ0004QSPZ | | AB | DD | | C | Red screw(3×6) | 赤ﾋﾞｽ | | |
| 47 | PGUMS0336FCZZ | | AB | DJ | | C | Table glass gum | ﾃｰﾌﾞﾙｶﾞﾗｽｺﾞﾑ | | |
| 49 | PSHEP6310FCZZ | | AB | DD | | C | FFC protect sheet | FFC保護ｼｰﾄ | | |
| 51 | XRESP40-05000 | | AA | DD | | C | E ring(E4) | Eﾘﾝｸﾞ | | |
| 52 | PSHEP6257FCPZ | | AC | DJ | | C | FFC protect mylar | FFC保護ﾏｲﾗｰ | | |
| 55 | LX-WZ0119FCP1 | | AC | DD | | C | Washer | ﾜｯｼｬｰ | | |
| | (Unlt) | | | | | | | | | |
| 901 | DUNT-8756DS12 | | CH | UM | N | E | Optical unit(Refer to Matrix)[Include Block[1]-10,[17],[18],[20]]光学ﾕﾆｯﾄ | | | |
| | DUNT-8756DS11 | | CG | UM | N | E | Optical unit(Refer to Matrix)[Include Block[1]-10,[17],[18],[20]]光学ﾕﾆｯﾄ | | | |
| | DUNT-8756DS13 | | | | N | E | Optical unit(Refer to Matrix)[Include Block[1]-10,[17],[18],[20]]光学ﾕﾆｯﾄ | | | 1st lot |

## Matrix

| No.901 | 光学ﾕﾆｯﾄ (Optical unit) | | | | | | | | | | | | |
|---|---|---|---|---|---|---|---|---|---|---|---|---|---|
| PARTS CODE | MX-7040N MX-6240N | | MX-6540FN | | | | | | | | | | |
| | Americas, Europe, Australia, Asia, South Africa | Taiwan | Japan（日本） | | | | | | | | | | |
| DUNT-8756DS12 | | | 1st lot | | | | | | | | | | |
| DUNT-8756DS11 | 1st lot | | | | | | | | | | | | |
| DUNT-8756DS13 | | 1st lot | | | | | | | | | | | |

## 19 ｽｷｬﾅｰﾕﾆｯﾄ 2(Scanner unit 2)

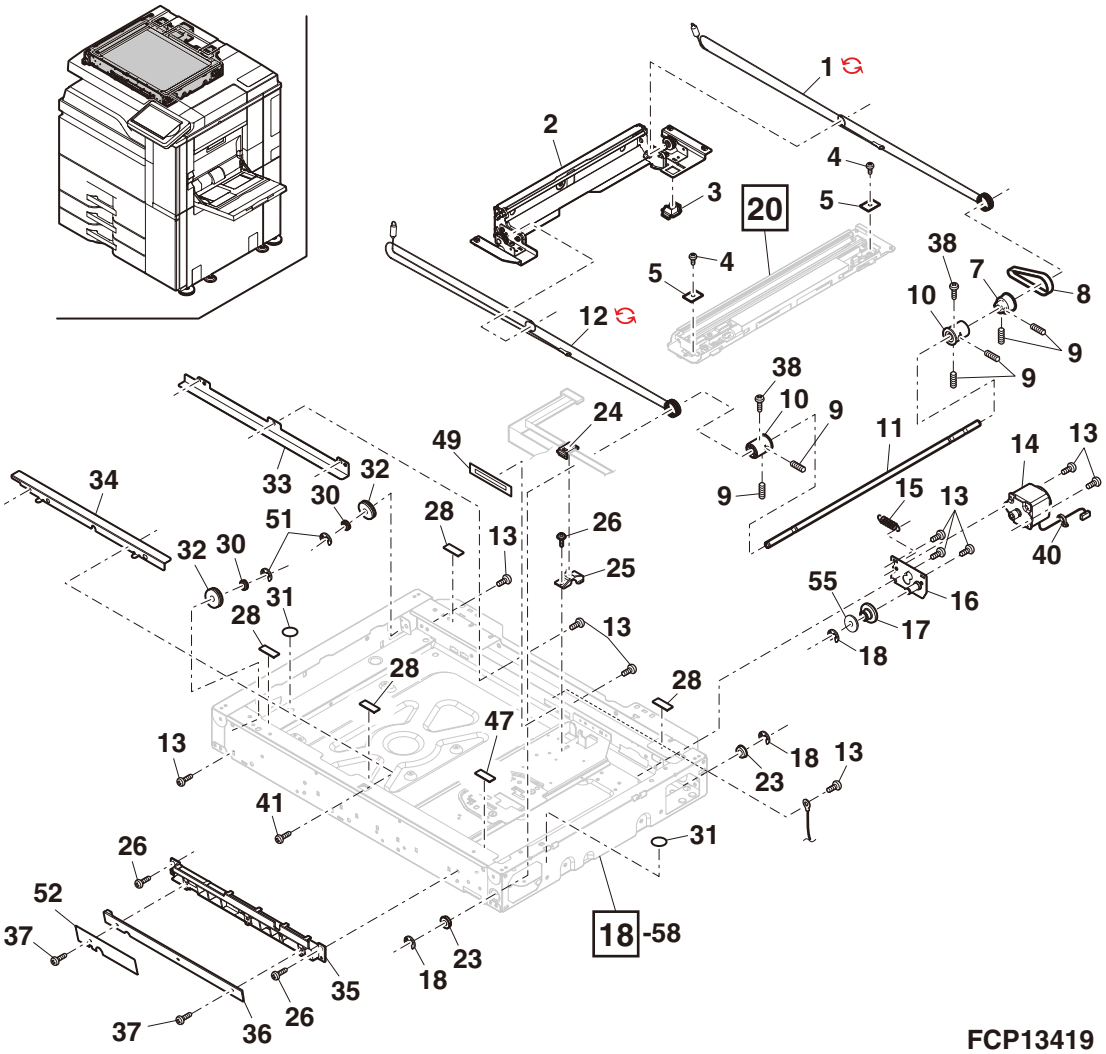


FCP13419

## 20 ﾗﾝﾌﾟﾕﾆｯﾄ (Lamp unit)

| NO. | PARTS CODE | Inter-change | PRICE RANK Ex. | PRICE RANK Ja. | NEW MARK | PART RANK | DESCRIPTION | TR No. | Effective time |
|---|---|---|---|---|---|---|---|---|---|
| 1 | PREFL0180FCZZ | | AN | EG | | C | Reflector リフレクター | | |
| 2 | XEBS730P10000 | | AC | DD | | C | Screw(3×10) ﾋﾞｽ | | |
| 3 | LPLTP7985FCZZ | | AK | EB | | C | Optical web guide plate 導光板 | | |
| 4 | CPWBX1991FCE1 | | BM | HV | | E | LED OC unit LED OC ﾕﾆｯﾄ | | |
| 5 | DHAi-4774FCPZ | | AM | EG | | C | LED harness LED ﾊｰﾈｽ | | |
| 6 | XBBS830P06000 | | AA | DD | | C | Screw(3×6) ﾋﾞｽ | | |
| 7 | PGiDM2531FCZZ | | AM | EG | | D | LED PWB guide LED 基板ｶﾞｲﾄﾞ | | |
| 8 | PSHEP6185FCZZ | | AF | DS | | C | DRV PWB sheet (Refer to Matrix) DRV 基板ｼｰﾄ | | |
| | PSHEP6572FCZZ | | | | N | C | DRV PWB sheet (Refer to Matrix) DRV 基板ｼｰﾄ | | 1st lot |
| 9 | PMiR-0164FCZZ | | AP | EQ | | B | 1st mirror 第 1 ﾐﾗｰ | | |
| 10 | QCNW-0227FCZ1 | | AE | DJ | | C | SCN-Lamp FFC SCN-ﾗﾝﾌﾟ FFC | | |
| 11 | XHBS730P06000 | | AC | DD | | C | Screw(3×6) ﾋﾞｽ | | |
| 12 | MSPRP4030FCZZ | | AE | DJ | | C | Mirror spring LED ﾐﾗｰｽﾌﾟﾘﾝｸﾞ LED | | |
| 13 | CPWBN1964FCE4 | | AY | FQ | | E | LED DRV unit LED DRV ﾕﾆｯﾄ | | |
| 14 | MSLiP0166FCZZ | | AE | DJ | | C | Slider 滑り材 | | |
| 15 | PCUSS0033QSZZ | | AC | DJ | | C | Mirror cushion N ﾐﾗｰｸｯｼｮﾝ N | | |
| 16 | LFiX-0673FCZZ | | AC | DJ | | C | CL lead harness fixture CL ﾘｰﾄﾞﾊｰﾈｽ押え | | |
| 17 | LDAiU0815FCZ1 | | AN | EG | | D | Lamp base LED ﾗﾝﾌﾟﾍﾞｰｽ LED | | |
| 18 | PMLT-1614FCZZ | | AA | DJ | | C | Rail cushion ﾚｰﾙｸｯｼｮﾝ | | |
| 19 | RCORF0021QSZZ | | AK | DX | | C | Core [Taiwan] ｺｱ | | 1st lot |
| 20 | RCORF1017MPZZ | | AH | DX | | C | Core [Taiwan] ｺｱ | | 1st lot |
| 21 | LBNDJ0037FCZ1 | | AA | DJ | | C | Band(T-18S) [Taiwan] ﾊﾞﾝﾄﾞ | | 1st lot |
| | (Unlt) | | | | | | | | |
| 901 | CDAiU0815DS59 | | BR | LX | | E | Lamp unit (Refer to Matrix) ﾗﾝﾌﾟﾕﾆｯﾄ | | |
| | CDAiU0815DS61 | | | | N | E | Lamp unit (Refer to Matrix) ﾗﾝﾌﾟﾕﾆｯﾄ | | 1st lot |

# Matrix

| No.8 | DRV 基板ｼｰﾄ (DRV PWB sheet) | | | | | | | | | | | | |
|---|---|---|---|---|---|---|---|---|---|---|---|---|---|
| PARTS CODE | MX-7040N MX-6240N | | MX-6540FN | | | | | | | | | | |
| | Americas, Europe Australia Asia South Africa | Taiwan | Japan（日本） | | | | | | | | | | |
| PSHEP6185FCZZ | 1st lot | | 1st lot | | | | | | | | | | |
| PSHEP6572FCZZ | | 1st lot | | | | | | | | | | | |

| No.901 | ﾗﾝﾌﾟﾕﾆｯﾄ (Lamp unit) | | | | | | | | | | | | |
|---|---|---|---|---|---|---|---|---|---|---|---|---|---|
| PARTS CODE | MX-7040N MX-6240N | | MX-6540FN | | | | | | | | | | |
| | Americas, Europe Australia Asia South Africa | Taiwan | Japan（日本） | | | | | | | | | | |
| CDAiU0815DS59 | 1st lot | | 1st lot | | | | | | | | | | |
| CDAiU0815DS61 | | 1st lot | | | | | | | | | | | |

## 20 ﾗﾝﾌﾟﾕﾆｯﾄ (Lamp unit)

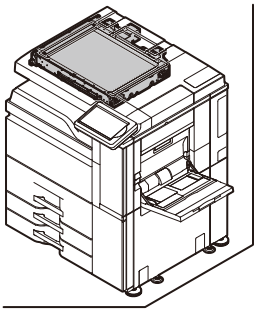

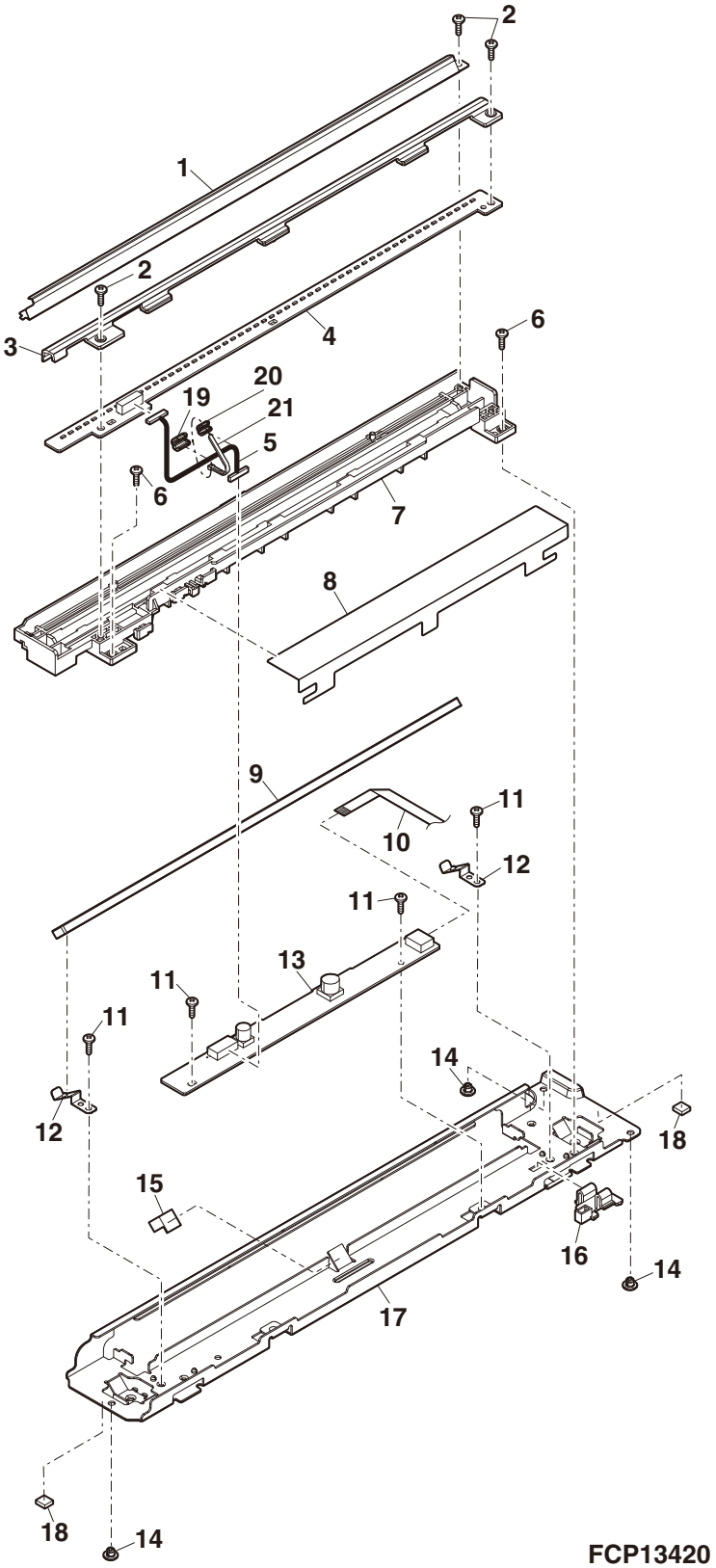


FCP13420

## 21 ﾀﾝﾃﾞﾑｶｾｯﾄ 1(Tandem cassette 1)

| NO. | PARTS CODE | Inter-change | PRICE RANK Ex. | PRICE RANK Ja. | NEW MARK | PART RANK | DESCRIPTION | | TR No. | Effective time |
|---|---|---|---|---|---|---|---|---|---|---|
| 1 | LPLTP6788FCZZ | | AK | DX | | C | Tandem rear edge plate R | ﾀﾝﾃﾞﾑ後端板 R | | |
| | LPLTP6788FCZ1 | 1 | AK | DX | | C | Tandem rear edge plate R | ﾀﾝﾃﾞﾑ後端板 R | | Sep/12 R/C |
| 2 | XEBS740P12000 | | AA | DD | | C | Screw(4×12) | ﾋﾞｽ | | |
| 3 | LPLTP6275FCZZ | | AG | DX | | C | Rear edge regulation plate F [Japan( 日本 ),Hong Kong,Thailand,India,Asia 2,Asia 4 ,Asia 5,Asia 6,Asia 7,Asia 8,Class B] | 後端規制板 F | | |
| | LPLTP6275FCBZ | 1 | AG | DX | N | C | Rear edge regulation plate F [Japan( 日本 ),Hong Kong,Thailand,India,Asia 2,Asia 4 ,Asia 5,Asia 6,Asia 7,Asia 8,South Africa] | 後端規制板 F | | Jan/13 R/C |
| 4 | LPLTP6789FCZZ | | AL | EB | | C | Tandem rear edge plate F | ﾀﾝﾃﾞﾑ後端板 F | | |
| | LPLTP6789FCZ1 | 1 | AL | EB | | C | Tandem rear edge plate F | ﾀﾝﾃﾞﾑ後端板 F | | Sep/12 R/C |
| 5 | LPLTP6276FCZZ | | AG | DX | | C | Rear edge regulation plate R [Japan( 日本 ),Hong Kong,Thailand,India,Asia 2,Asia4 ,Asia 5,Asia 6,Asia 7,Asia 8,Class B] | 後端規制板 R | | |
| | LPLTP6276FCBZ | | AG | DX | N | C | Rear edge regulation plate R [Japan( 日本 ),Hong Kong,Thailand,India,Asia 2,Asia4 ,Asia 5,Asia 6,Asia 7,South Africa] | 後端規制板 R | | Jan/13 R/C |
| 6 | XHBS740P08000 | | AA | DD | | C | Screw(4×8) | ﾋﾞｽ | | |
| 7 | PCOVP2031FCZ1 | | AG | DX | | D | Tandem edge cover R | ﾀﾝﾃﾞﾑｴｯｼﾞｶﾊﾞｰ R | | |
| 8 | LPLTP5838FCZ3 | | AK | DX | | C | Tandem regulation plate R | ﾀﾝﾃﾞﾑ規制板 R | | |
| | LPLTP5838FCB3 | 1 | AK | DX | N | C | Tandem regulation plate R | ﾀﾝﾃﾞﾑ規制板 R | | Aug/12 R/C |
| 9 | QEARP0135FCZ1 | | AZ | FX | | C | Tandem regulation earth plate | ﾀﾝﾃﾞﾑ規制ｱｰｽ板 | | |
| 10 | TLABZ4453FCZZ | | AF | DS | | D | Indication label | 表示指示線ﾗﾍﾞﾙ | | |
| 11 | LX-BZ0983FCPZ | | AD | DD | | C | Screw(4×8) | ﾋﾞｽ | | |
| 12 | CPLTM5839FC03 | | AV | FG | | C | Off center regulation plate R | ｵﾌｾﾝﾀｰ調整板 R | | |
| 14 | LPLTP5837FCZ2 | | AH | DX | | C | Tandem regulation plate L | ﾀﾝﾃﾞﾑ規制板 L | | |
| | LPLTP5837FCB2 | 1 | AH | DX | N | C | Tandem regulation plate L | ﾀﾝﾃﾞﾑ規制板 L | | Aug/12 R/C |
| 15 | CPLTM6880FC02 | | AS | EQ | | C | Off center regulation plate F | ｵﾌｾﾝﾀｰ調整板 F | | |
| 16 | PCOVP2030FCZZ | | AF | DS | | D | Tandem edge cover R | ﾀﾝﾃﾞﾑｴｯｼﾞｶﾊﾞｰ R | | |
| 17 | PCOVP2118FCZZ | | AF | DS | | D | Tandem edge cover | ﾀﾝﾃﾞﾑｴｯｼﾞｶﾊﾞｰ | | |
| 18 | XWHS740-08120 | | AA | DD | | C | Washer | ﾜｯｼｬｰ | | |
| 19 | TCADZ6029FCZ1 | | AE | DJ | | D | Size display card(Refer to Matrix) | ｻｲｽﾞ表示ｶｰﾄﾞ | | |
| | C TCADZ6027FCZ1 | - | AD | DJ | | D | Size display card(Refer to Matrix) | ｻｲｽﾞ表示ｶｰﾄﾞ | | 1st lot |
| | C TCADZ6028FCZ1 | - | AE | DJ | | D | Size display card(Refer to Matrix) | ｻｲｽﾞ表示ｶｰﾄﾞ | | 1st lot |
| | TCADZ6030FCZ1 | - | AE | DJ | | D | Size display card(Refer to Matrix) | ｻｲｽﾞ表示ｶｰﾄﾞ | | 1st lot |
| 20 | XHBS740P10000 | | AA | DD | | C | Screw(4×10) | ﾋﾞｽ | | |
| 21 | PTPE-0356FCZZ | | AC | DD | N | C | Handle support tape | 取手保持ﾃｰﾌﾟ | | |
| 22 | MLEVP1244FCZZ | | AH | DX | N | C | Cassette release lever | ｶｾｯﾄ解除ﾚﾊﾞｰ | | |
| 23 | GCOV-0357FCZZ | | AZ | FQ | N | D | Cassette handle cover | ｶｾｯﾄ取手ｶﾊﾞｰ | | |
| 24 | JHNDP0217FCZZ | | AK | DX | N | C | Cassette handle | ｶｾｯﾄ取手 | | |
| 26 | GCAB-1423FCZZ | | BA | FX | N | D | Tandem front cabinet | ﾀﾝﾃﾞﾑ前ｷｬﾋﾞ | | |
| 27 | PTME-0355FCZ1 | | AC | DD | | C | U cassette lock pawl | U ｶｾｯﾄﾛｯｸ爪 | | |
| 28 | NBRGC0188FCZZ | | AB | DD | | C | A2-PF bearing | A2-PF 軸受 | | |
| 30 | PSHEZ5603FCZZ | | AH | DX | | C | Paper feed base sheet R | 給紙台ｼｰﾄ R | | |
| 31 | PSHEZ5602FCZZ | | AL | EB | | C | Paper feed base sheet F | 給紙台ｼｰﾄ F | | |
| 32 | PSHEP5568FCZZ | | AA | DJ | | C | Tandem front cabinet sheet | ﾀﾝﾃﾞﾑ前ｷｬﾋﾞｼｰﾄ | | |
| 33 | XEBS740P08000 | | AA | DD | | C | Screw(4×8) | ﾋﾞｽ | | |
| 34 | XEBS740P10000 | | AA | DD | | C | Screw(4×10) | ﾋﾞｽ | | |
| 35 | GCAB-1424FCZZ | | AZ | FQ | N | D | Tandem inside cabinet | ﾀﾝﾃﾞﾑ内ｷｬﾋﾞ | | |
| | GCAB-1424FCZ1 | 1 | AZ | FQ | N | D | Tandem inside cabinet | ﾀﾝﾃﾞﾑ内ｷｬﾋﾞ | | Jun/12 |
| 36 | NSFTZ3618FCZZ | | AP | EQ | N | C | Tandem lock shaft | ﾀﾝﾃﾞﾑﾛｯｸ軸 | | |
| 37 | MARMP0473FCZZ | | AC | DJ | | C | U cassette release arm | U ｶｾｯﾄ解除ｱｰﾑ | | |
| 38 | LPiNS0327FCZZ | | AC | DJ | | C | Spring pin(φ2-10) | ｽﾌﾟﾘﾝｸﾞﾋﾟﾝ | | |
| 39 | XRESP50-06000 | | AA | DD | | C | E ring(E5) | E ﾘﾝｸﾞ | | |
| 40 | LX-BZ3006SCPM | | AA | DD | | C | Screw(3×6) | ﾋﾞｽ | | |
| 41 | MSPRD4184FCZZ | | AE | DJ | | C | U cassette lock pawl spring | U ｶｾｯﾄﾛｯｸ爪 ｽﾌﾟﾘﾝｸﾞ | | |
| 42 | LPLTP6274FCZZ | | AN | EQ | | C | B5 regulation plate [Japan( 日本 ),Hong Kong,Thailand,India,Asia 2,Asia4 ,Asia 5,Asia 6,Asia 7,Asia 8,Class B] | B5 規制板 | | |
| | LPLTP6274FCZZ | | AN | EQ | | C | B5 regulation plate [Japan( 日本 ),Hong Kong,Thailand,India,Asia 2,Asia4 ,Asia 5,Asia 6,Asia 7,Asia 8,South Africa] | B5 規制板 | | 1st lot |
| 43 | QEARP0169FCZZ | | AG | DS | | C | B5 regulation earth plate [Japan( 日本 ),Hong Kong,Thailand,India,Asia 2,Asia4 ,Asia 5,Asia 6,Asia 7,Asia 8,Class B] | B5 規制ｱｰｽ板 | | |
| | QEARP0169FCZZ | | AG | DS | | C | B5 regulation earth plate [Japan( 日本 ),Hong Kong,Thailand,India,Asia 2,Asia4 ,Asia 5,Asia 6,Asia 7,Asia 8,South Africa] | B5 規制ｱｰｽ板 | | 1st lot |
| 44 | PSHEZ6528FCZZ | | AC | DD | | C | Tandem PC sheet 1.0 | ﾀﾝﾃﾞﾑ PC ｼｰﾄ 1.0 | | 1st lot |
| | PSHEZ6528FCZZ | 5 | AC | DD | | C | Tandem PC sheet 1.0 | ﾀﾝﾃﾞﾑ PC ｼｰﾄ 1.0 | | Jun/12 |
| 45 | PSHEZ6529FCZZ | | AC | DD | | C | Tandem PC sheet 1.5 | ﾀﾝﾃﾞﾑ PC ｼｰﾄ 1.5 | | 1st lot |
| | PSHEZ6529FCZZ | 5 | AC | DD | | C | Tandem PC sheet 1.5 | ﾀﾝﾃﾞﾑ PC ｼｰﾄ 1.5 | | Jun/12 |
| 501 | CCAB-1423FC31 | | BU | NE | N | E | Tandem front cabinet unit | ﾀﾝﾃﾞﾑ前ｷｬﾋﾞ ﾕﾆｯﾄ | | |
| | (Unit) | | | | | | | | | |
| 901 | DUNT-7718FC19 | | CF | UK | N | E | Tandem LCC cassette unit(Refer to Matrix) [Include[22],[23],[24]] | ﾀﾝﾃﾞﾑ LCC ｶｾｯﾄ ﾕﾆｯﾄ | | |
| | DUNT-7718FC20 | | CF | UH | N | E | Tandem LCC cassette unit(Refer to Matrix) [Include[22],[23],[24]] | ﾀﾝﾃﾞﾑ LCC ｶｾｯﾄ ﾕﾆｯﾄ | | |

21 ﾀﾝﾃﾞﾑｶｾｯﾄ 1(Tandem cassette 1)

## Matrix

| No.19 | ｻｲｽﾞ表示ｶｰﾄﾞ (Size display card) | | | | | | | | | | | | | |
|---|---|---|---|---|---|---|---|---|---|---|---|---|---|---|
| PARTS CODE | MX-7040N MX-6240N | | | MX-6540FN | | | | | | | | | | |
| | Americas, Asia 3 | Europe,Australia, Asia 1,Asia 2, Asia 4,Asia 5, Asia 6,Asia 7, Asia 8,South Africa | Taiwan | Japan( 日本 ) | | | | | | | | | | |
| TCADZ6029FCZ1 | | | | 1st lot | | | | | | | | | | |
| C〉TCADZ6027FCZ1 | 1st lot | | | | | | | | | | | | | |
| C〉TCADZ6028FCZ1 | | 1st lot | | | | | | | | | | | | |
| TCADZ6030FCZ1 | | | 1st lot | | | | | | | | | | | |

| No.901 | ﾀﾝﾃﾞﾑ LCC ｶｾｯﾄﾕﾆｯﾄ (Tandem LCC cassette unit) | | | | | | | | | | | | | |
|---|---|---|---|---|---|---|---|---|---|---|---|---|---|---|
| PARTS CODE | MX-7040N MX-6240N | MX-6540FN | | | | | | | | | | | | |
| DUNT-7718FC19 | | 1st lot | | | | | | | | | | | | |
| DUNT-7718FC20 | 1st lot | | | | | | | | | | | | | |

## 21 ﾀﾝﾃﾞﾑｶｾｯﾄ 1(Tandem cassette 1)

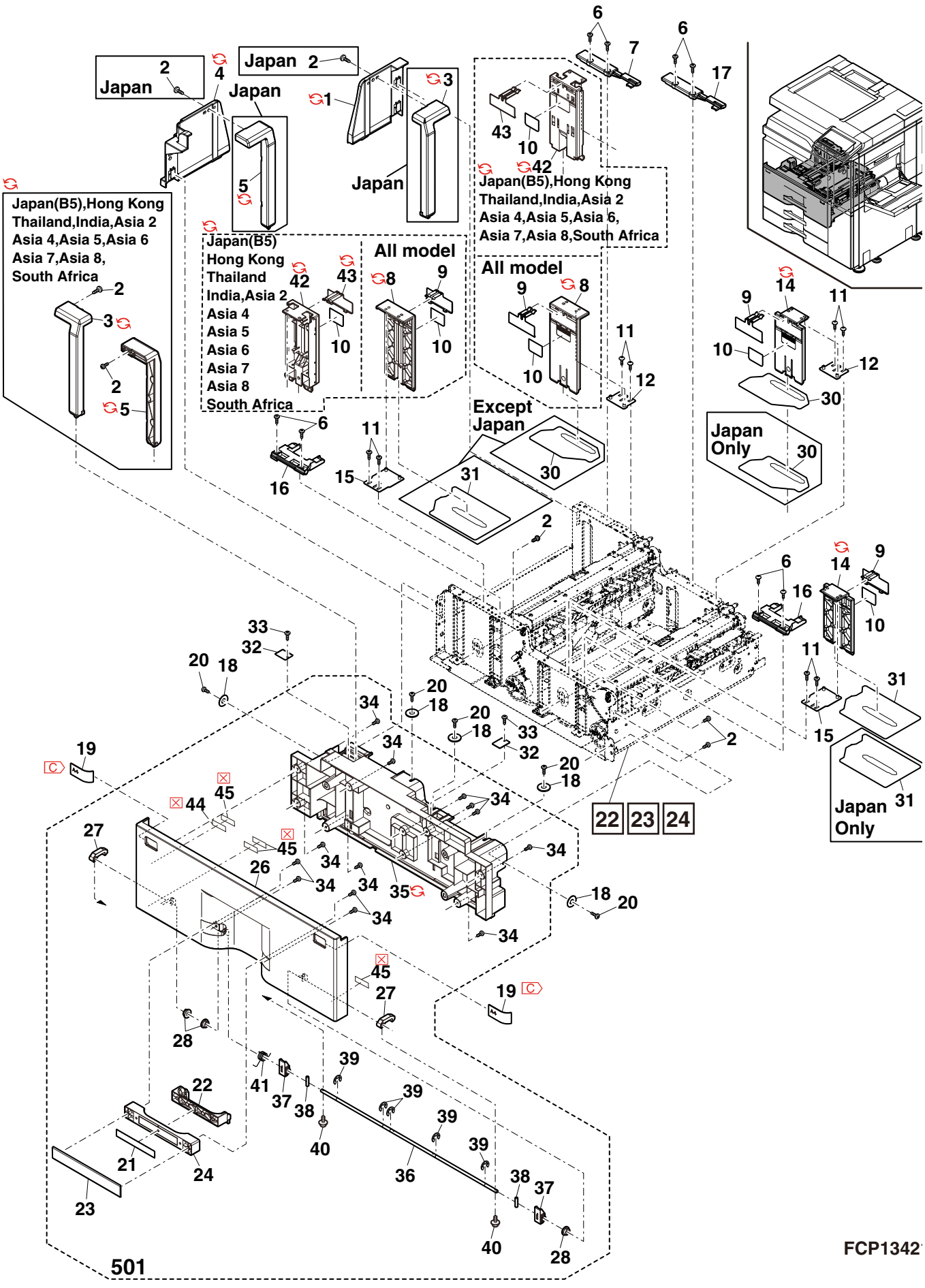

## 22 ﾀﾝﾃﾞﾑｶｾｯﾄ 2(Tandem cassette 2)

| NO. | PARTS CODE | PRICE RANK | | NEW MARK | PART RANK | DESCRIPTION | |
|---|---|---|---|---|---|---|---|
| | | Ex. | Ja. | | | | |
| 1 | LPLTM6882FCZZ | AK | DX | | C | Paper feed PG upper reinforce plate | 給紙 PG 上補強板 |
| 2 | XEBS740P12000 | AA | DD | | C | Screw(4×12) | ﾋﾞｽ |
| 3 | PGiDM2227FCZ2 | AR | EQ | | C | Tandem paper feed PG upper | ﾀﾝﾃﾞﾑ給紙 PG 上 |
| 5 | NSFTZ3111FCZZ | AF | DS | | C | Tandem pick up roller shaft | ﾀﾝﾃﾞﾑ呼込みﾛｰﾗｰ軸 |
| 6 | NPLYZ0365FCZZ | AC | DJ | | C | Pick up roller pulley | 呼込みﾛｰﾗｰﾌﾟｰﾘｰ |
| 7 | NPLYZ0476FCZZ | AH | DX | | C | Paper feed roller pulley | 給紙ﾛｰﾗｰﾌﾟｰﾘｰ |
| 8 | NBLTH0338FCZZ | AH | DX | | B | Tandem paper feed belt | ﾀﾝﾃﾞﾑ給紙ﾍﾞﾙﾄ |
| 9 | NCPL-0081FCBZ | AH | DX | | C | One way coupling | ﾜﾝｳｪｲｶｯﾌﾟﾘﾝｸﾞ |
| 10 | NRŌLR1467FCZ2 | AN | EQ | | A | Pick up roller | 呼込みﾛｰﾗｰ |
| 11 | NRŌLR1466FCZ2 | AN | EQ | | A | Paper feed separate roller | 給紙分離ﾛｰﾗｰ |
| 12 | PGiDM2226FCZZ | AE | DS | | C | Tandem support PG upper | ﾀﾝﾃﾞﾑ補助 PG 上 |
| 13 | NSFTZ2838FCZZ | AK | DX | | C | Tandem paper feed roller shaft | ﾀﾝﾃﾞﾑ給紙ﾛｰﾗｰ軸 |
| 14 | MLEVP1023FCZZ | AD | DJ | | C | PE actuator | PE ｱｸﾁｭｴｰﾀｰ |
| 15 | LPLTM6382FCZZ | AC | DJ | | C | PE protect plate | PE 保護板 |
| 16 | MSPRD3547FCZZ | AC | DJ | | C | PG upper earth spring | PG 上ｱｰｽｽﾌﾟﾘﾝｸﾞ |
| 19 | LX-WZ0473FCZZ | AA | DD | | C | Poly slider(ϕ6.2-12 t0.25) | ﾎﾟﾘｽﾗｲﾀﾞｰ |
| 20 | XRESP50-06000 | AA | DD | | C | E ring(E5) | Eﾘﾝｸﾞ |
| 21 | NBRGC0651FCZZ | AD | DJ | | C | Bearing | 軸受 |
| 22 | CSFTZ2836DS53 | AL | EB | | C | Tandem separate drive shaft | ﾀﾝﾃﾞﾑ分離駆動軸 |
| 23 | LPiNS0133FCZZ | AA | DD | | C | Pin(ϕ2-10) | 平行ﾋﾟﾝ |
| 24 | PCLC-0334FCZZ | AZ | FQ | | B | Paper feed torque limiter | 給紙ﾄﾙｸﾘﾐｯﾀｰ |
| 25 | LPLTM7087FCZZ | AE | DS | | C | Separate shaft fixing plate | 分離軸固定板 |
| 26 | LX-BZ0941FCPZ | AC | DD | | C | Screw(4×8) | ﾋﾞｽ |
| 27 | NBRGM0096FCZ1 | AC | DJ | | C | Bearing | ﾐﾗｰ軸受 N |
| 28 | MSPRC3550FCZ2 | AC | DJ | | C | Tandem pressure spring | ﾀﾝﾃﾞﾑ圧接ｽﾌﾟﾘﾝｸﾞ |
| 29 | CSFTZ2837DS52 | AP | EQ | | C | Tandem separate roller shaft | ﾀﾝﾃﾞﾑ分離ﾛｰﾗｰ軸 |
| 30 | LHLDZ1726FCZ1 | AF | DS | | C | Bearing holder | 軸受ﾎﾙﾀﾞｰ |
| 31 | XHBS740P08000 | AA | DD | | C | Screw(4×8) | ﾋﾞｽ |
| 32 | LHLDZ1727FCZZ | AE | DJ | | C | Rotation fulcrum | 回転支点 |
| 34 | PGiDM2225FCZZ | AF | DS | | C | Tandem support PG lower | ﾀﾝﾃﾞﾑ補助 PG 下 |
| 35 | PGiDM2228FCZ1 | AV | FG | | C | Tandem paper feed lower PG R | ﾀﾝﾃﾞﾑ給紙下 PG R |
| 36 | NGERH0863FCZZ | AB | DD | | C | Pick up roller gear(18T) | ﾋﾟｯｸｱｯﾌﾟﾛｰﾗｰｷﾞﾔ |
| 38 | PSHEP5521FCZ1 | AB | DJ | | C | Tandem separate sheet | ﾀﾝﾃﾞﾑ分離ｼｰﾄ |
| 39 | PSHEP5520FCZZ | AB | DJ | | C | SP protect sheet | SP 保護ｼｰﾄ |
| 40 | LHLDZ1469FCZZ | AE | DJ | | C | Upper transport fulcrum holder | 上搬送支点ﾎﾙﾀﾞｰ |
| 41 | LX-BZ0670FCP1 | AC | DD | | C | Drive joint stopper screw N | 駆動連結ｽﾄｯﾊﾟｰﾋﾞｽ N |
| 42 | NBRGC0531FCZZ | AC | DJ | | C | Bearing(6-4) | 軸受 |
| 43 | LPiNS0334FCZZ | AB | DJ | | C | Spring pin(ϕ3-14) | ｽﾌﾟﾘﾝｸﾞﾋﾟﾝ |
| 44 | MSPRD3548FCZZ | AC | DJ | | C | Pick adjust spring | ﾋﾟｯｸ調整ｽﾌﾟﾘﾝｸﾞ |
| 46 | PGiDM2229FCZ2 | AX | FG | | C | Tandem paper feed lower PG L | ﾀﾝﾃﾞﾑ給紙下 PG L |
| 47 | MSPRD3769FCZZ | AE | DS | | C | Return spring | ﾀﾝﾃﾞﾑ上 PG 復帰ｽﾌﾟﾘﾝｸﾞ |
| 501 | CGiDM2227DS51 | | | N | E | Tandem paper feed PG upper | ﾀﾝﾃﾞﾑ給紙 PG 上 |
| 502 | CHLDZ1726DS51 | | | N | E | Bearing holder unit | 軸受ﾎﾙﾀﾞｰﾕﾆｯﾄ |

## 22 ﾀﾝﾃﾞﾑｶｾｯﾄ 2(Tandem cassette 2)

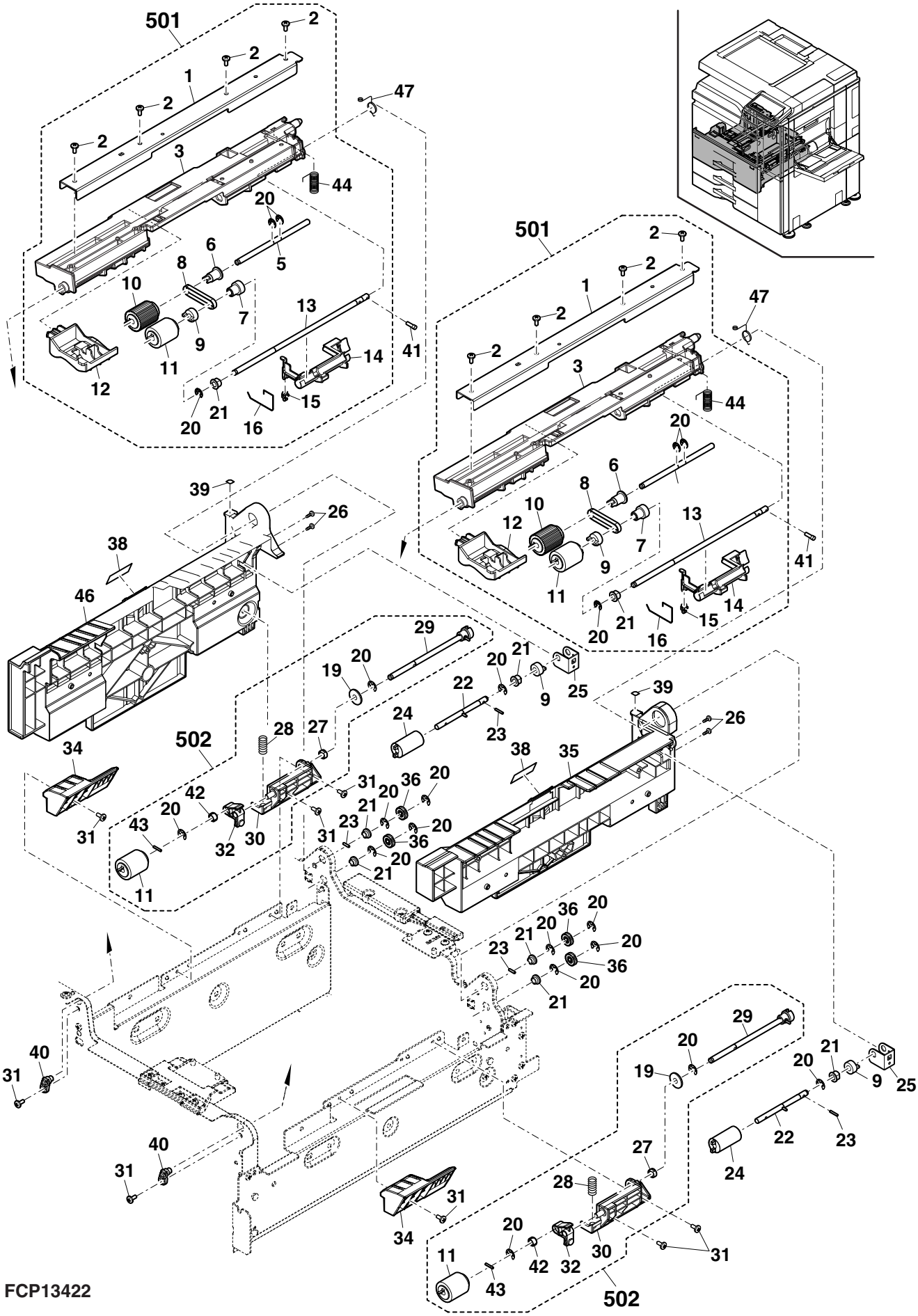

## 23 ﾀﾝﾃﾞﾑｶｾｯﾄ 3(Tandem cassette 3)

| NO. | PARTS CODE | PRICE RANK | | NEW MARK | PART RANK | DESCRIPTION | |
|---|---|---|---|---|---|---|---|
| | | Ex. | Ja. | | | | |
| 1 | LPLTM6881FCZZ | AS | EQ | | C | Paper feed lower PGL reinforce plate | 給紙下 PGL 補強板 |
| 2 | CFRM-1250FC02 | AY | FQ | | C | Frame R | ﾌﾚｰﾑ R |
| 3 | XRESP50-06000 | AA | DD | | C | E ring(E5) | E ﾘﾝｸﾞ |
| 4 | NGERH0863FCBZ | AD | DJ | | C | Pick up roller gear(18T) | ﾋﾟｯｸｱｯﾌﾟﾛｰﾗｰｷﾞﾔ |
| 6 | XHBS740P08000 | AA | DD | | C | Screw(4×8) | ﾋﾞｽ |
| 9 | LPLTM6883FCZZ | AF | DS | | C | T cassette positioning plate | T ｶｾｯﾄ位置決め板 |
| 10 | CSTYM0395FC03 | AV | FG | | C | Cassette right stay | ｶｾｯﾄ右ｽﾃｲ |
| 11 | XEBS740P12000 | AA | DD | | C | Screw(4×12) | ﾋﾞｽ |
| 13 | LPLTM6884FCZZ | AX | FG | | C | Tandem bottom plate | ﾀﾝﾃﾞﾑ底板 |
| 15 | CFRM-1251FC01 | AY | FQ | | C | Frame F | ﾌﾚｰﾑ F |
| 16 | LSTYM0396FCZZ | AP | EQ | | C | Cassette left stay | ｶｾｯﾄ左ｽﾃｲ |
| 17 | LX-BZ0941FCPZ | AC | DD | | C | Screw(4×8) | ﾋﾞｽ |
| 25 | PSHEZ5746FCZZ | AB | DJ | | C | Frame protect sheet | ﾌﾚｰﾑ保護ｼｰﾄ |
| 26 | PSHEZ5747FCZZ | AC | DJ | | C | Stay protect sheet | ｽﾃｲ保護ｼｰﾄ |
| 27 | PSHEZ5748FCZZ | AB | DJ | | C | Position plate protect sheet | 位置決板保護ｼｰﾄ |
| 28 | PSHEZ5749FCZZ | AD | DJ | | C | Edge protect sheet | ｴｯｼﾞ保護ｼｰﾄ |
| | | | | | | | |
| | | | | | | | |
| | | | | | | | |
| | | | | | | | |

## 23 ﾀﾝﾃﾞﾑｶｾｯﾄ 3(Tandem cassette 3)

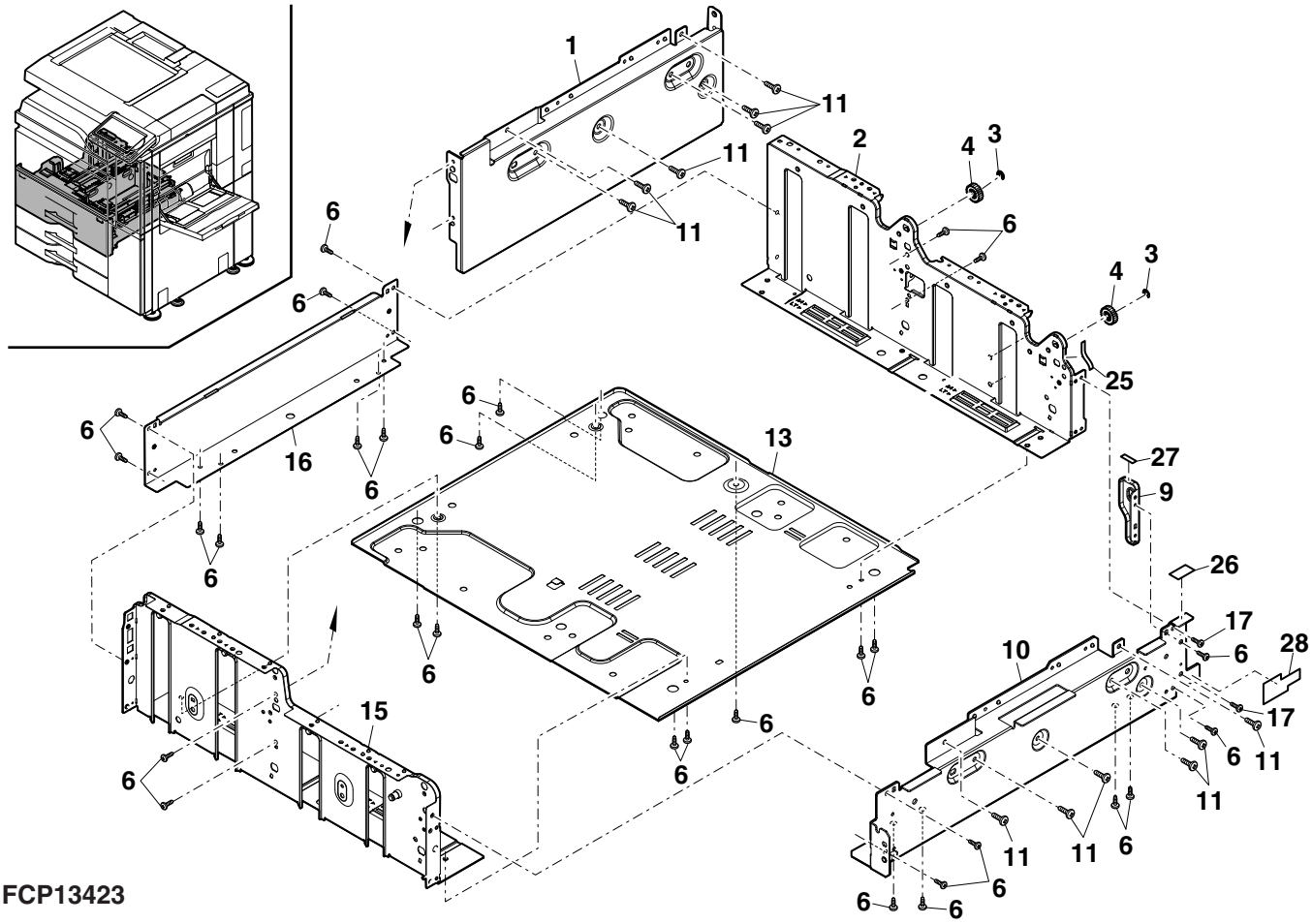

## 24 ﾀﾝﾃﾞﾑｶｾｯﾄ 4(Tandem cassette 4)

| NO. | PARTS CODE | PRICE RANK | | NEW MARK | PART RANK | DESCRIPTION | |
|---|---|---|---|---|---|---|---|
| | | Ex. | Ja. | | | | |
| 1 | PWiR-0196FCZ1 | AR | EQ | | B | Wire RB | ﾜｲﾔｰ RB |
| 2 | PWiR-0195FCZ2 | AQ | EQ | | B | Wire RA | ﾜｲﾔｰ RA |
| 3 | PGiDM1943FCZZ | AF | DS | | C | Paper feed base guide | 給紙台ｶﾞｲﾄﾞ |
| 4 | LDAiU0727FCZZ | AT | EZ | | C | Paper feed base | 給紙台 |
| 5 | PSHEZ3138FCZZ | AC | DD | | C | Paper feed base sheet | 給紙台ｸﾗﾘｰﾉ |
| 6 | PWiR-0194FCZ1 | AR | EQ | | B | Wire LB | ﾜｲﾔｰ LB |
| 7 | PWiR-0193FCZ2 | AQ | EQ | | B | Wire LA | ﾜｲﾔｰ LA |
| 10 | MSPRD3549FCZ1 | AH | DX | | C | Tray lift support spring | ﾄﾚｲﾘﾌﾄ補助ｽﾌﾟﾘﾝｸﾞ |
| 11 | MARMP0271FCZ1 | AK | EB | | C | Spring lock arm | ｽﾌﾟﾘﾝｸﾞﾛｯｸｱｰﾑ |
| 12 | NBRGC0080FCZ1 | AD | DJ | | C | Bearing | 軸受 |
| 13 | LSTPP0358FCZZ | AF | DS | | C | Wire fixing stopper | ﾜｲﾔｰ押えｽﾄｯﾊﾟｰ |
| 14 | NPLYZ0400FCZZ | AC | DJ | | C | Wire pulley | ﾜｲﾔｰﾌﾟｰﾘｰ |
| 15 | XHBS740P08000 | AA | DD | | C | Screw(4×8) | ﾋﾞｽ |
| 16 | LHLDW0005SCZZ | AB | DD | | C | Clamp | ｸﾗﾝﾌﾟ |
| 17 | XRESP70-08000 | AA | DD | | C | E ring(E7) | Eﾘﾝｸﾞ |
| 18 | NPLYZ0379FCZZ | AP | EQ | | C | Winder pulley | 巻取ﾌﾟｰﾘｰ |
| 19 | PCOVP1581FCZ1 | AK | DX | | D | Winder pulley cover | 巻取ﾌﾟｰﾘｰｶﾊﾞｰ |
| 20 | LPiNS0337FCZZ | AB | DJ | | C | Pin(φ3-12) | 平行ﾋﾟﾝ |
| 21 | NBRGP0829FCZZ | AG | DS | | C | Resin bearing(φ8-10) | 樹脂軸受 |
| 22 | LPiNS0263FCZZ | AD | DJ | | C | T type pin | T型ﾋﾟﾝ |
| 23 | CSFTZ3074DS71 | AU | FG | | C | Winder shaft | 巻取り軸 |
| 501 | CSFTZ3074DS51 | AW | FG | | E | Winder shaft unit | 巻取り軸ﾕﾆｯﾄ |
| | | | | | | | |
| | | | | | | | |
| | | | | | | | |
| | | | | | | | |

## 24 ﾀﾝﾃﾞﾑｶｾｯﾄ 4(Tandem cassette 4)

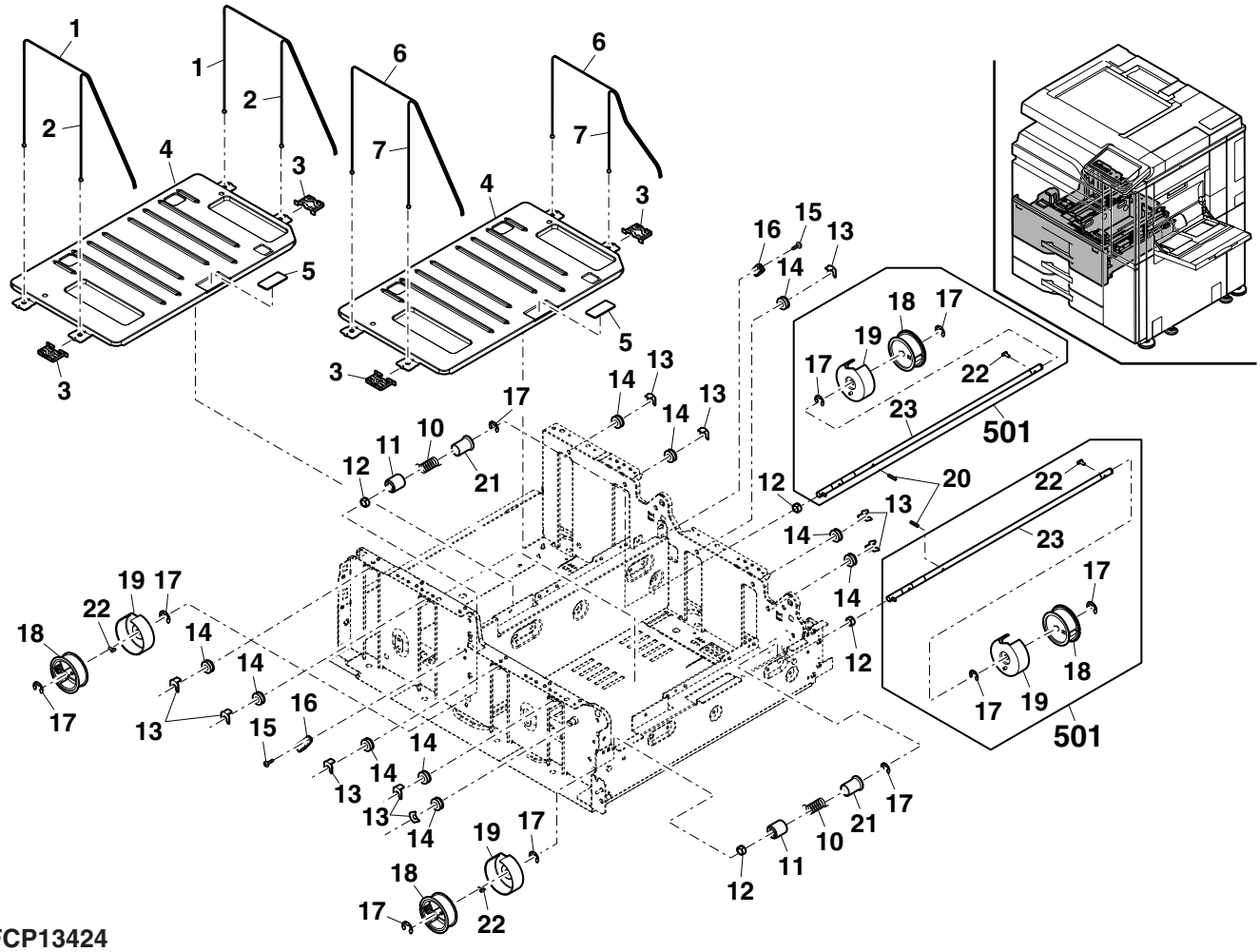


FCP13424

## 25 中継ﾊﾟｽﾕﾆｯﾄ (Interface pass unit)

| NO. | PARTS CODE | PRICE RANK | | NEW MARK | PART RANK | DESCRIPTION | |
|---|---|---|---|---|---|---|---|
| | | Ex. | Ja. | | | | |
| 1 | LPLTM7033FCZZ | AL | EB | | C | Interface transport plate L | 中継搬送ﾌﾟﾚｰﾄL |
| 2 | LPLTM7034FCZZ | AL | EB | | C | Interface transport plate R | 中継搬送ﾌﾟﾚｰﾄR |
| 3 | XRESP40-06000 | AA | DD | | C | E ring(E4) | Eﾘﾝｸﾞ |
| 4 | NBRGP0588FCZZ | AC | DJ | | C | Collar follower bearing | ｺﾛ従動軸受 |
| 6 | MSPRC2634FCZZ | AB | DJ | | C | Transport collar pressure spring | 搬送ｺﾛ圧接ｽﾌﾟﾘﾝｸﾞ |
| 7 | PGiDM2230FCZ1 | BA | FX | | C | Interface pass PG lower | 中継ﾊﾟｽPG下 |
| 8 | NROLP1468FCZZ | AE | DJ | | C | Transport follower roller | 搬送従動ﾛｰﾗｰ |
| 9 | NSFTZ3075FCZZ | AL | EB | | C | Interface pass follower roller shaft | 中継ﾊﾟｽ従動ﾛｰﾗｰ軸 |
| 10 | XRESP50-06000 | AA | DD | | C | E ring(E5) | Eﾘﾝｸﾞ |
| 11 | MSPRT3222FCZZ | AC | DJ | | C | Interface pass follower spring | 中継ﾊﾟｽ従動ｽﾌﾟﾘﾝｸﾞ |
| 12 | LHLDZ1568FCZZ | AD | DJ | | C | Interface pass pressure holder | 中継ﾊﾟｽ圧接ﾎﾙﾀﾞｰ |
| 13 | PCLR-0488FCZZ | AD | DJ | | C | Interface pass pressure collar | 中継ﾊﾟｽ圧接ｺﾛ |
| 14 | LPLTM6887FCZZ | AK | DX | | C | Interface pass reinforce plate L | 中継ﾊﾟｽ補強ﾌﾟﾚｰﾄL |
| 15 | XHBS740P08000 | AA | DD | | C | Screw(4×8) | ﾋﾞｽ |
| 16 | VHPGP2A200L-18 | AQ | EQ | | B | Photo sensor(GP2A200L) | ﾌｫﾄｾﾝｻｰ |
| 17 | XEBS730P08000 | AC | DD | | C | Screw(3×8) | ﾋﾞｽ |
| 18 | PSHEP5543FCZZ | AB | DJ | | C | Harness fixing sheet | ﾊｰﾈｽ押えｼｰﾄ |
| 19 | LX-BZ0670FCP1 | AC | DD | | C | Drive joint stopper screw N | 駆動連結ｽﾄｯﾊﾟｰﾋﾞｽN |
| 20 | NROLR1605FCZZ | AP | EQ | | C | Interface pass transport roller | 中継ﾊﾟｽ搬送ﾛｰﾗｰ |
| 21 | XEBS740P10000 | AA | DD | | C | Screw(4×10) | ﾋﾞｽ |
| 22 | QEARP0242FCZZ | AD | DJ | | C | Interface earth plate L | 中継ｱｰｽ板L |
| 23 | XHBS730P06000 | AC | DD | | C | Screw(3×6) | ﾋﾞｽ |
| 24 | LPLTM6194FCZZ | AC | DJ | | C | Interface pass PG lower regulation plate | 中継ﾊﾟｽPG下規制板 |
| 25 | QEARP0243FCZZ | AE | DJ | | C | Interface earth plate R | 中継ｱｰｽ板R |
| 26 | XRESP70-08000 | AA | DD | | C | E ring(E7) | Eﾘﾝｸﾞ |
| 27 | NBRGY0466FCZ1 | AK | DX | | C | Bearing(φ8-16) | 軸受 |
| 28 | CFRM-1252FC01 | AK | EB | | C | Interface pass frame R | 中継ﾊﾟｽﾌﾚｰﾑR |
| 29 | PGiDM2231FCZ1 | AY | FQ | | C | Interface pass PG upper | 中継ﾊﾟｽPG上 |
| 30 | QEARP0201FCZZ | AC | DJ | | C | Roller earth plate | ﾛｰﾗｰｱｰｽ板 |
| 31 | LFRM-1553FCZZ | AN | EG | N | C | Interface pass frame F | 中継ﾊﾟｽﾌﾚｰﾑF |
| 32 | MSPRC3221FCZZ | AC | DJ | | C | Interface pass pressure spring | 中継ﾊﾟｽ圧接ｽﾌﾟﾘﾝｸﾞ |
| 33 | DHAi-5042FCPZ | AM | EG | N | C | Tandem transport harness | ﾀﾝﾃﾞﾑ搬送ﾊｰﾈｽ |
| 35 | LPLTM7467FCZZ | AC | DJ | | C | Interface pass regulation plate | 中継ﾊﾟｽ規制板 |
| 501 | CGiDM2230DS53 | BF | GN | | E | Interface pass lower unit | 中継ﾊﾟｽ下ﾕﾆｯﾄ |

## 25 中継ﾊﾟｽﾕﾆｯﾄ (Interface pass unit)

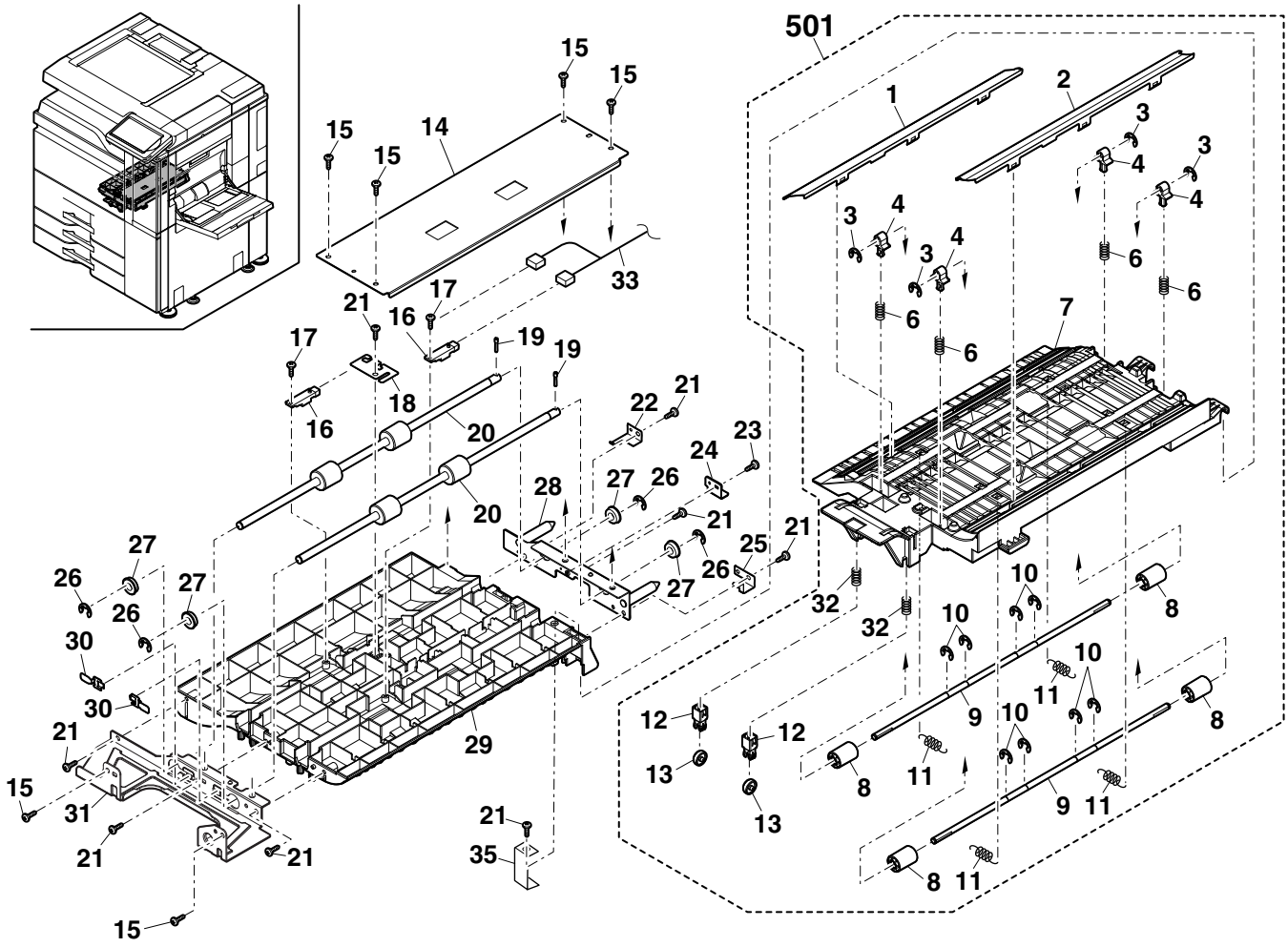


FCP13425

## 26 給紙ﾄﾚｲ (Paper feed tray)

| NO. | PARTS CODE | Inter-change | PRICE RANK Ex. | PRICE RANK Ja. | NEW MARK | PART RANK | DESCRIPTION | | TR No. | Effective time |
|---|---|---|---|---|---|---|---|---|---|---|
| 1 | LPLTP6436FCZ1 | | AN | EQ | | C | Regulation plate R | 規制板R | | |
| 3 | PTPE-0282FCZ1 | | AA | DJ | | C | Side plate tape R | 側板ﾃｰﾌﾟR | | |
| 4 | LPLTM6445FCZZ | | AB | DJ | | C | Regulation plate | 規制板 | | |
| 5 | MARMP0320FCZZ | | AG | DX | | C | Multi size detect arm | ﾏﾙﾁｻｲｽﾞ検知ｱｰﾑ | | |
| 6 | LPLTM6885FCZZ | | AT | EZ | | C | Turn plate | 回転板 | | |
| 7 | PSHEZ5397FCZ1 | | AD | DD | | C | Rotation plate sheet | 回転板ｼｰﾄ | | |
| 9 | LPLTP6439FCZ1 | | AE | DS | | C | Rear edge plate | 後端板 | | |
| 10 | LPLTP6304FCZZ | | AP | EQ | | C | Tab paper rear edge plate(Only 1st cassette) | ﾀﾌﾞ紙後端板 | | |
| 11 | TLABH5167FCZZ | | AG | DX | | D | Tab paper explanation label | ﾀﾌﾞ紙説明ﾗﾍﾞﾙ | | |
| 13 | LPLTP6437FCZZ | | AQ | EQ | | C | Regulation plate F | 規制板F | | |
| 14 | MLEVF1264FCZZ | | AE | DJ | | C | Width detect lever 2(Only 1st cassette) | 幅検知ﾚﾊﾞｰ2 | | |
| 15 | XEBS730P08000 | | AC | DD | | C | Screw(3×8) | ﾋﾞｽ | | |
| 16 | LPLTP6794FCZZ | | AE | DJ | | C | OC adjust plate | OC調整板 | | |
| 17 | NGERH1609FCZZ | | AC | DJ | | C | Gear(18T) | ｷﾞﾔ | | |
| 18 | XEBS740P06000 | | AA | DD | | C | Screw(4×6)(Only 2nd cassette) | ﾋﾞｽ | | |
| 19 | LHLDW1226FCZZ | | AB | DJ | | C | Turn fastener | ﾀｰﾝﾌｧｽﾅｰ | | |
| 20 | XEBS740P12000 | | AA | DD | | C | Screw(4×12) | ﾋﾞｽ | | |
| 21 | LHLDZ1618FCZ1 | | AC | DJ | | C | Rear edge plate holder | 後端板ﾎﾙﾀﾞｰ | | |
| | LHLDZ1618FCZ2 | 3 | AC | DJ | N | C | Rear edge plate holder | 後端板ﾎﾙﾀﾞｰ | | Sep/12 R/C |
| 22 | LX-BZ0531FCPZ | | AB | DD | | C | Screw | ﾋﾞｽ | | |
| 23 | GCASP0179FCZ1 | | BA | FX | | D | 500 cassette | 500ｶｾｯﾄ | | |
| 24 | PSHEZ5760FCZZ | | AC | DJ | | C | Rotation plate silencer | 回転板消音材 | | |
| 25 | LX-BZ1023FCZZ | | AD | DJ | | C | Screw | ﾋﾞｽ | | |
| 26 | MSPRC4186FCZZ | | AD | DJ | | C | Cassette earth spring | ｶｾｯﾄｱｰｽｽﾌﾟﾘﾝｸﾞ | | |
| 27 | PSHEP5620FCZZ | | AD | DJ | | C | Separate front sheet | 分離前ｼｰﾄ | | |
| 28 | MLEVP0923FCZZ | | AC | DJ | | C | Remain actuator | 残量ｱｸﾁｭｴｰﾀｰ | | |
| 29 | MSPRD3419FCZZ | | AB | DJ | | C | Remain actuator spring | 残量ｱｸﾁｭｴｰﾀｰｽﾌﾟﾘﾝｸﾞ | | |
| 30 | NBRGP0735FCZZ | | AC | DJ | | C | CG bearing | CG軸受 | | |
| 31 | XRESP70-08000 | | AA | DD | | C | E ring(E7) | Eﾘﾝｸﾞ | | |
| 32 | CPLTM6444FC01 | | AN | EQ | | C | Lift plate | ﾘﾌﾄﾌﾟﾚｰﾄ | | |
| 33 | MSPRD3418FCZZ | | AF | DS | | C | Lift plate silence spring | ﾘﾌﾄﾌﾟﾚｰﾄ消音ｽﾌﾟﾘﾝｸﾞ | | |
| 34 | LPLTP6793FCZZ | | AF | DS | | C | Size detect plate | ｻｲｽﾞ検知ﾌﾟﾚｰﾄ | | |
| 35 | XWHS740-08120 | | AA | DD | | C | Washer | ﾜｯｼｬｰ | | |
| 36 | TCADZ6029FCZ1 | | AE | DJ | | D | Size display card(Refer to Matrix) | ｻｲｽﾞ表示ｶｰﾄﾞ | | |
| | TCADZ6027FCZ1 | | AD | DJ | | D | Size display card(Refer to Matrix) | ｻｲｽﾞ表示ｶｰﾄﾞ | | |
| | TCADZ6028FCZ1 | | AE | DJ | | D | Size display card(Refer to Matrix) | ｻｲｽﾞ表示ｶｰﾄﾞ | | |
| | TCADZ6030FCZ1 | | AE | DJ | | D | Size display card(Refer to Matrix) | ｻｲｽﾞ表示ｶｰﾄﾞ | | 1st lot |
| 37 | NSFTZ3709FCZZ | | AN | EG | | C | O cassette lock shaft | Oｶｾｯﾄﾛｯｸ軸 | | |
| 38 | GCAB-1421FCZZ | | BA | FX | | D | Cassette front cabinet | ｶｾｯﾄ前ｷｬﾋﾞ | | |
| 39 | JHNDP0217FCZZ | | AK | DX | | C | Cassette handle | ｶｾｯﾄ取手 | | |
| 40 | PTME-0355FCZ1 | | AC | DD | | C | U cassette lock pawl | Uｶｾｯﾄﾛｯｸ爪 | | |
| 41 | LX-BZ3006SCPM | | AA | DD | | C | Screw(3×6) | ﾋﾞｽ | | |
| 42 | XPSSJ40-25000 | | AA | DD | | C | Spring pin(ϕ4-25) | ｽﾌﾟﾘﾝｸﾞﾋﾟﾝ | | |
| 44 | LHLDZ1728FCZ1 | | AD | DJ | | C | Regulation plate spring holder | 規制板ﾊﾞﾈﾎﾙﾀﾞｰ | | |
| 45 | MSPRC4221FCZZ | | AD | DJ | | C | Regulation plate spring holder spring | 規制板ﾊﾞﾈﾎﾙﾀﾞｰｽﾌﾟﾘﾝｸﾞ | | |
| 46 | TLABZ5217FCZZ | | AE | DJ | | D | High temperature caution label CD | (1st cassette only) 高温注意ﾗﾍﾞﾙCD | | |
| 47 | XRESP50-06000 | | AA | DD | | C | E ring(E5) | Eﾘﾝｸﾞ | | |
| 48 | LPiNS0327FCZZ | | AC | DJ | | C | Spring pin(ϕ2-10) | ｽﾌﾟﾘﾝｸﾞﾋﾟﾝ | | |
| 49 | MARMP0473FCZZ | | AC | DJ | | C | U cassette release arm | Uｶｾｯﾄ解除ｱｰﾑ | | |
| 50 | NBRGC0188FCZZ | | AB | DD | | C | A2-PF bearing | A2-PF軸受 | | |
| 51 | MSPRD4184FCZZ | | AE | DJ | | C | U cassette lock pawl spring | Uｶｾｯﾄﾛｯｸ爪ｽﾌﾟﾘﾝｸﾞ | | |
| 52 | GCOV-0357FCZZ | | AZ | FQ | | D | Cassette handle cover | ｶｾｯﾄ取手ｶﾊﾞｰ | | |
| 53 | PTPE-0356FCZZ | | AC | DD | | C | Handle support tape | 取手保持ﾃｰﾌﾟ | | |
| 54 | GCAB-1488FCZZ | | AX | FG | | D | O cassette inside cabinet | Oｶｾｯﾄ内ｷｬﾋﾞ | | |
| 55 | MLEVP1244FCZZ | | AH | DX | | C | Cassette release lever | ｶｾｯﾄ解除ﾚﾊﾞｰ | | |
| 56 | XEBS740P10000 | | AA | DD | | C | Screw(4×10) | ﾋﾞｽ | | |
| 501 | CPLTM6444FC31 | | | | N | E | Lift plate unit | ﾘﾌﾄﾌﾟﾚｰﾄﾕﾆｯﾄ | | |
| | (Unit) | | | | | | | | | |
| 901 | CCASP0179FC33 | | BP | LP | | E | Cassette(1st cassette)(Refer to Matrix) | ｶｾｯﾄ | | |
| | CCASP0179FC34 | | BN | LE | | E | Cassette(2nd cassette)(Refer to Matrix) | ｶｾｯﾄ | | |

## 26 給紙ﾄﾚｲ (Paper feed tray)

## Matrix

| No.36 | ｻｲｽﾞ表示ｶｰﾄﾞ (Size display card) | | | | | | | | | | | | | |
|---|---|---|---|---|---|---|---|---|---|---|---|---|---|---|
| PARTS CODE | MX-7040N<br>MX-6240N | | | MX-6540FN | | | | | | | | | | |
| | Americas,<br>Asia 3 | Europe,Australia,<br>Asia 1,Asia 2,<br>Asia 4,Asia 5,<br>Asia 6,Asia 7,<br>Asia 8,South Africa | Taiwan | Japan( 日本 ) | | | | | | | | | | |
| TCADZ6029FCZ1 | | | | 1st lot | | | | | | | | | | |
| TCADZ6027FCZ1 | 1st lot | | | | | | | | | | | | | |
| TCADZ6028FCZ1 | | 1st lot | | | | | | | | | | | | |
| TCADZ6030FCZ1 | | | 1st lot | | | | | | | | | | | |

| No.901 | ｶｾｯﾄ (Cassette) | | | | | | | | | | | | | | |
|---|---|---|---|---|---|---|---|---|---|---|---|---|---|---|---|
| PARTS CODE | 1st cassette | 2nd cassette | | | | | | | | | | | | | |
| CCASP0179FC33 | 1st lot | | | | | | | | | | | | | | |
| CCASP0179FC34 | | 1st lot | | | | | | | | | | | | | |

## 26 給紙トレイ (Paper feed tray)

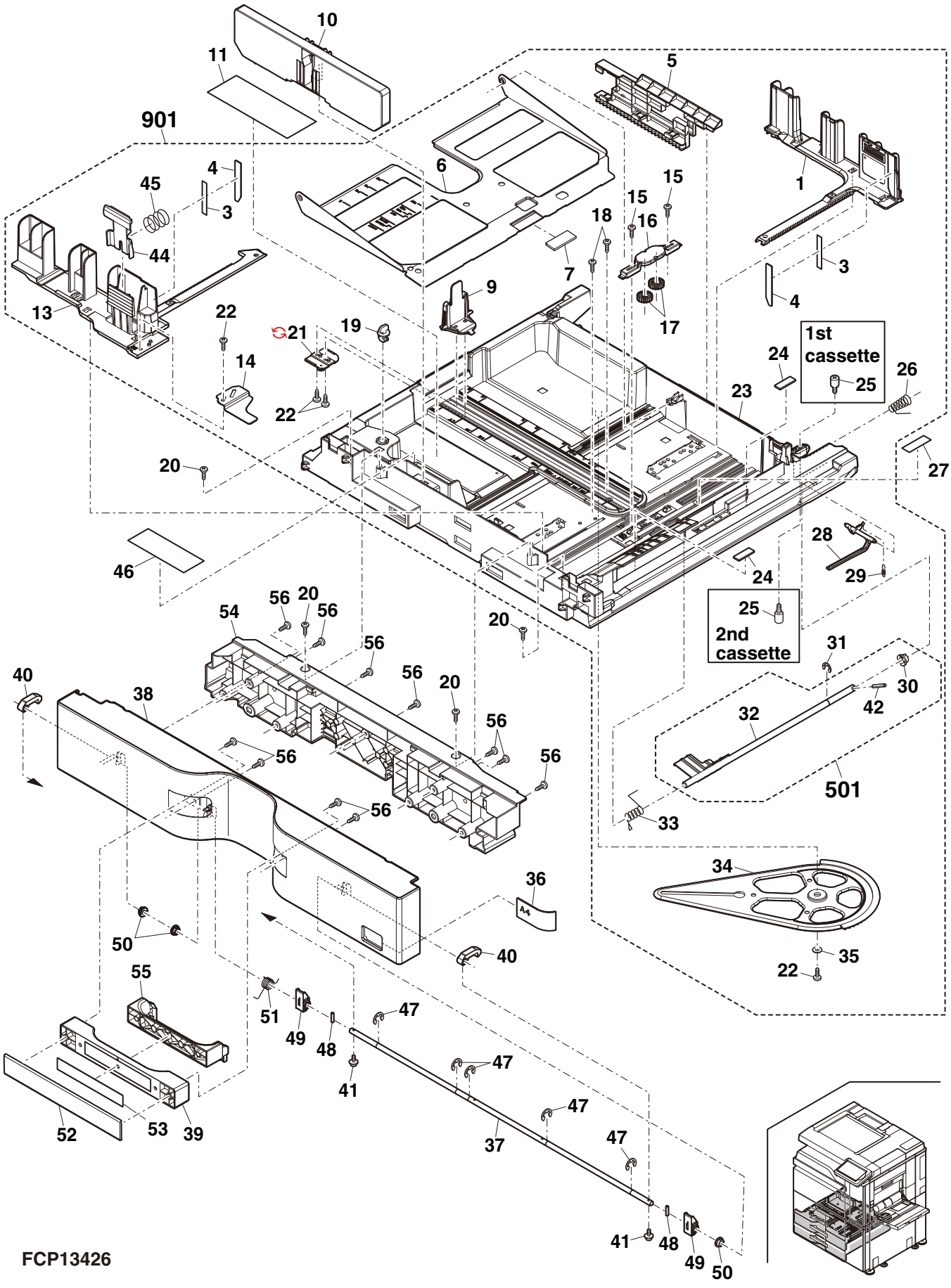

## 27 給紙ﾕﾆｯﾄ上 (Paper feed unit upper)

| NO. | PARTS CODE | Inter-change | PRICE RANK Ex. | PRICE RANK Ja. | NEW MARK | PART RANK | DESCRIPTION | TR No | Effective time |
|---|---|---|---|---|---|---|---|---|---|
| 1 | LPLTM6514FCZZ | | AN | EQ | | C | Paper feed upper PG reinforce plate 給紙上 PG 補強板 | | |
| 2 | XEBS740P10000 | | AA | DD | | C | Screw(4×10) ﾋﾞｽ | | |
| 3 | XHBS740P08000 | | AA | DD | | C | Screw(4×8) ﾋﾞｽ | | |
| 4 | DHAi-5035FCPZ | | AM | EG | | C | Paper feed UN harness 給紙 UN ﾊｰﾈｽ | | |
| 5 | MARMP0357FCZZ | | AE | DJ | | C | Paper feed solenoid arm 給紙ｿﾚﾉｲﾄﾞｱｰﾑ | | |
| 6 | RPLU-0369FCZZ | | AW | FG | | B | Paper feed solenoid 給紙ｿﾚﾉｲﾄﾞ | | |
| 7 | XBBS730P04000 | | AA | DD | | C | Screw(3×4) ﾋﾞｽ | | |
| 8 | LPLTM6891FCZZ | | AF | DS | | C | Paper feed solenoid plate 給紙ｿﾚﾉｲﾄﾞ板 | | |
| 9 | NROLR1607FCZZ | | AT | EZ | | C | Transport roller 3 搬送ﾛｰﾗｰ 3 | | |
| 11 | MLEVP1095FCZZ | | AC | DJ | | C | Pick up release lever 呼込解除ﾚﾊﾞｰ | | |
| 12 | XEBS730P08000 | | AC | DD | | C | Screw(3×8) ﾋﾞｽ | | |
| 13 | LPLTP5827FCZZ | | AF | DS | | C | Multi sensor fixing plate ﾏﾙﾁｾﾝｻｰ取付板 | | |
| 14 | VHPGP1A73A+-18 | | AF | DS | | B | Photo sensor(GP1A73A) ﾌｫﾄｾﾝｻｰ | | |
| 15 | MLEVP1169FCZZ | | AC | DJ | | C | PE actuator N PE ｱｸﾁｭｴｰﾀｰ N | | |
| 16 | XRESP50-06000 | | AA | DD | | C | E ring(E5) E ﾘﾝｸﾞ | | |
| 17 | NGERH1561FCZZ | | AD | DJ | | C | Paper feed gear(18T) 給紙ｷﾞﾔ | | |
| 18 | LPiNS0133FCZZ | | AA | DD | | C | Pin(ϕ2-10) 平行ﾋﾟﾝ | | |
| 19 | PCLR-0483FCZZ | | AC | DJ | | C | Drive collar(ϕ22.2) 駆動ｶﾗｰ | | |
| 20 | NBRGM0096FCZ1 | | AC | DJ | | C | Bearing ﾐﾗｰ軸受 N | | |
| 21 | NGERH1706FCZZ | | AP | EQ | | C | 1way gear(18T) 1WAY ｷﾞﾔ | | |
| 22 | NPLYZ0485FCZZ | | AR | EQ | | C | Transport pulley 3 搬送ﾌﾟｰﾘｰ 3 | | |
| 23 | NBRGY0466FCZ1 | | AK | DX | | C | Bearing(ϕ8-16) 軸受 | | |
| 24 | LFRM-1254FCZZ | | AF | DS | | C | Paper feed R frame 給紙 R ﾌﾚｰﾑ | | |
| 25 | PGiDM2415FCZ1 | | AQ | EQ | N | C | Paper feed upper PG 給紙上 PG | | |
| | ♻ PGiDM2415FCA1 | 1 | AQ | EQ | | C | Paper feed upper PG 給紙上 PG | | 12/Jul |
| 26 | PGiDM2416FCZ1 | | AG | DS | | C | Paper feed PG F 給紙 PG-F | | |
| 27 | LPLTP6795FCZZ | | AE | DS | | C | Sensor fixing plate ｾﾝｻｰ取付板 | | |
| 28 | VHPGP2A200L-18 | | AQ | EQ | | B | Photo sensor(GP2A200L) ﾌｫﾄｾﾝｻｰ | | |
| 29 | LHLDZ1965FCZZ | | AE | DJ | | C | Pick up holder 呼込ﾎﾙﾀﾞｰ | | |
| 30 | NROLP1351FCZZ | | AG | DX | | C | Follower roller 従動ﾛｰﾗｰ | | |
| 31 | LFRM-1278FCZZ | | AG | DX | | C | Paper feed fixing plate 給紙固定板 | | |
| 32 | QEARP0158FCZZ | | AB | DJ | | C | Interface pass earth plate 中継ﾊﾟｽｱｰｽ板 | | |
| 33 | LPLTM7007FCZZ | | AF | DS | | C | Paper feed fixing plate 給紙固定板 | | |
| 34 | NSFTZ2928FCZZ | | AR | EQ | | C | Pick up shaft 呼込軸 | | |
| 35 | NPLYZ0365FCZZ | | AC | DJ | | C | Pick up roller pulley ﾛｰﾗｰﾌﾟｰﾘｰ 呼込み | | |
| 36 | NBLTH0412FCZZ | | AE | DJ | | B | Belt(57MXL3.2) ﾍﾞﾙﾄ | | |
| 37 | NROLR1466FCZ2 | | AN | EQ | | A | Paper feed separate roller 給紙分離ﾛｰﾗｰ | | |
| 38 | NPLYZ0476FCZZ | | AH | DX | | C | Paper feed roller pulley 給紙ﾛｰﾗｰﾌﾟｰﾘｰ | | |
| 39 | NCPL-0081FCBZ | | AH | DX | | C | One way coupling ﾜﾝｳｪｲｶｯﾌﾟﾘﾝｸﾞ | | |
| 40 | NROLR1467FCZ2 | | AN | EQ | | A | Pick up roller 呼込みﾛｰﾗｰ | | |
| 41 | NSFTZ3076FCZZ | | AL | EB | | C | Paper feed shaft 給紙軸 | | |
| 42 | XHBS730P06000 | | AC | DD | | C | Screw(3×6) ﾋﾞｽ | | |
| 43 | XRESP40-06000 | | AA | DD | | C | E ring(E4) E ﾘﾝｸﾞ | | |
| 44 | XRESP70-08000 | | AA | DD | | C | E ring(E7) E ﾘﾝｸﾞ | | |
| 45 | MSPRT3223FCZZ | | AC | DJ | | C | Pick up solenoid spring ﾋﾟｯｸｱｯﾌﾟｿﾚﾉｲﾄﾞｽﾌﾟﾘﾝｸﾞ | | |
| 47 | PSHEP5745FCZZ | | AC | DJ | | C | Solenoid harness protect sheet ｿﾚﾉｲﾄﾞﾊｰﾈｽ保護ｼｰﾄ | | |
| 48 | MSPRT3431FCZZ | | AC | DJ | | C | Pick up pressure spring ｽﾌﾟﾘﾝｸﾞ ﾋﾟｯｸｱｯﾌﾟ加圧 | | |
| | (Unit) | | | | | | | | |
| 901 | CGiDM2415FC53 | | BZ | TF | | E | Paper feed unit upper [Include Block[29]-901] 給紙ﾕﾆｯﾄ上 | | |

## 27 給紙ユニット上 (Paper feed unit upper)

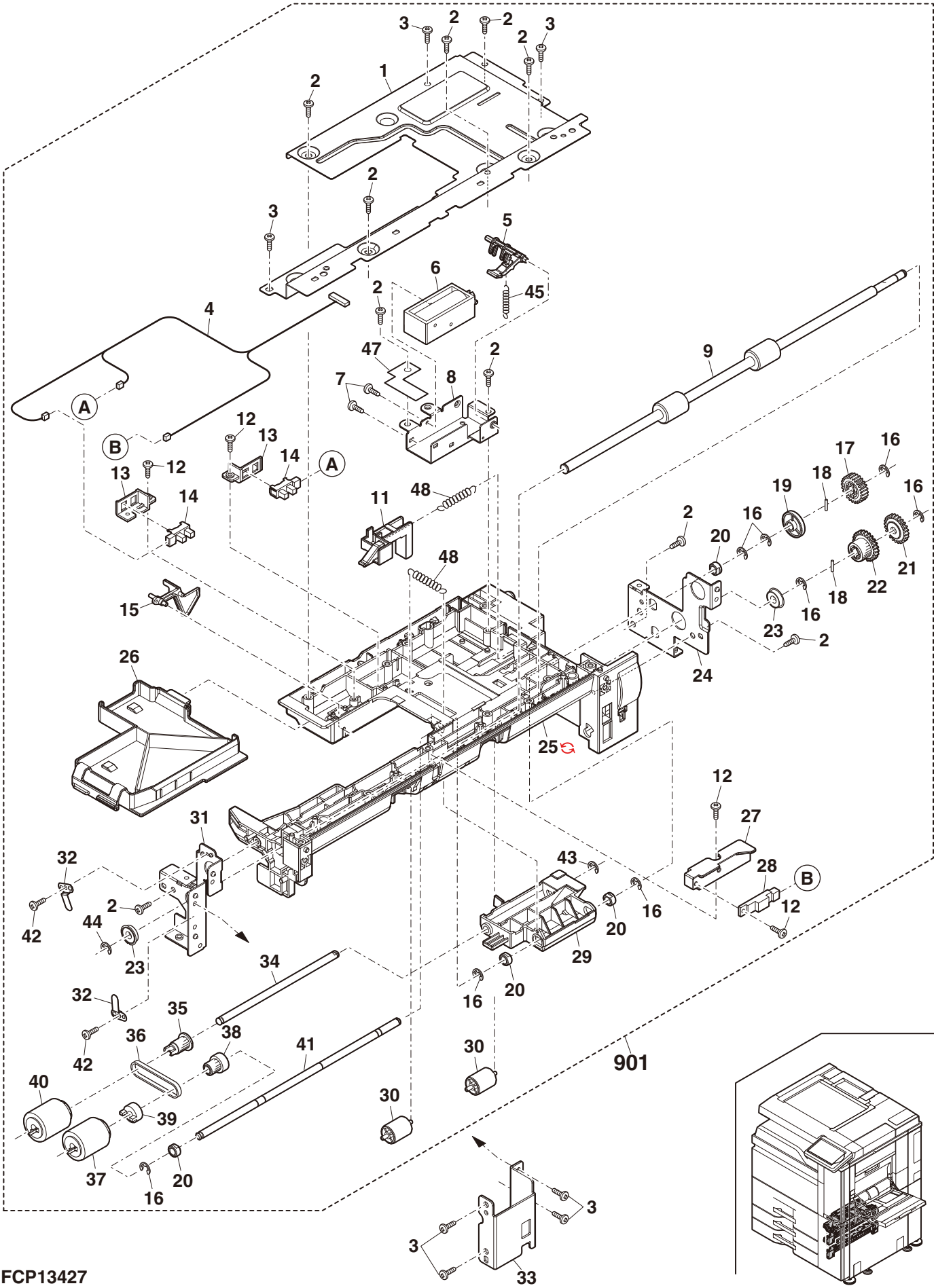


FCP13427

## 28 給紙ﾕﾆｯﾄ下 (Paper feed unit lower)

| NO. | PARTS CODE | Inter-change | PRICE RANK Ex. | PRICE RANK Ja. | NEW MARK | PART RANK | DESCRIPTION | | TR No. | Effective time |
|---|---|---|---|---|---|---|---|---|---|---|
| 1 | XRESP50-06000 | | AA | DD | | C | E ring(E5) | Eﾘﾝｸﾞ | | |
| 2 | NGERH1561FCZZ | | AD | DJ | | C | Paper feed gear(18T) | 給紙ｷﾞﾔ | | |
| 3 | NBRGM0096FCZ1 | | AC | DJ | | C | Bearing | ﾐﾗｰ軸受N | | |
| 5 | NCPL-0081FCZZ | | AH | DX | | C | One way coupling | ﾜﾝｳｪｲｶｯﾌﾟﾘﾝｸﾞ | | |
| 6 | PGiDM2123FCZZ | | AN | EQ | | C | Paper feed lower PG | 給紙下PG | | |
| | PGiDM2123FCAZ | 1 | AN | EQ | N | C | Paper feed lower PG | 給紙下PG | | 12/Jul |
| 7 | NROLR1466FCZ2 | | AN | EQ | | A | Paper feed separate roller | 給紙分離ﾛｰﾗｰ | | |
| 8 | XEBS740P10000 | | AA | DD | | C | Screw(4×10) | ﾋﾞｽ | | |
| 9 | NSFTZ3077FCZ1 | | AH | EQ | | C | Separate shaft C | 分離軸C | | |
| 10 | LPiNS0089FCZZ | | AA | DD | | C | SP pin(ϕ2-8) | SPﾋﾟﾝ | | |
| 11 | PCLC-0334FCZZ | | AZ | FQ | | B | Paper feed torque limiter | 給紙ﾄﾙｸﾘﾐｯﾀｰ | | |
| 12 | NCPL-0067FCZZ | | AD | DJ | | C | Separate coupling | 分離ｶｯﾌﾟﾘﾝｸﾞ | | |
| 13 | NBRGC0136FCZZ | | AC | DD | | C | Toner BOX bearing | ﾄﾅｰBOX軸受 | | |
| 14 | LPiNS0333FCZZ | | AB | DJ | | C | Spring pin(ϕ2-12) | ｽﾌﾟﾘﾝｸﾞﾋﾟﾝ | | |
| 15 | NSFTZ3078FCZ1 | | AG | EB | | C | Separate shaft B | 分離軸B | | |
| 16 | LPiNS0334FCZZ | | AB | DJ | | C | Spring pin(ϕ3-14) | ｽﾌﾟﾘﾝｸﾞﾋﾟﾝ | | |
| 17 | LHLDZ1607FCZZ | | AD | DJ | | C | Separate fulcrum | 分離支点 | | |
| 18 | MSPRC3398FCZZ | | AC | DJ | | C | Separate pressure spring | 分離圧接ｽﾌﾟﾘﾝｸﾞ | | |
| 19 | NROLP1593FCZZ | | AS | EZ | | C | Transport follower roller | 搬送従動ﾛｰﾗｰ | | |
| 20 | NSFTZ2949FCZZ | | AG | DX | | C | Right door follower shaft | 右ﾄﾞｱ従動軸 | | |
| 21 | MSPRC3399FCZZ | | AC | DJ | | C | Transport follower spring | 搬送従動ｽﾌﾟﾘﾝｸﾞ | | |
| 22 | LPLTP6484FCZZ | | AC | DJ | | C | Separate pressure release plate | 分離圧解除板 | | |
| 23 | LPLTM6515FCZ1 | | AH | DX | | C | Paper feed lower PG reinforce plate | 給紙下PG補強板 | | |
| 24 | MSPRT2973FCZZ | | AD | DJ | | C | Pressure release spring | 圧解除ｽﾌﾟﾘﾝｸﾞ | | |
| 25 | NBRGC0531FCZZ | | AC | DJ | | C | Bearing(6-4) | 軸受 | | |
| 26 | LPiNS0133FCZZ | | AA | DD | | C | Pin(ϕ2-10) | 平行ﾋﾟﾝ | | |
| 27 | XHBS740P08000 | | AA | DD | | C | Screw(4×8) | ﾋﾞｽ | | |
| 501 | CGiDM2123FC35 | | | | N | E | Paper feed unit lower | 給紙ﾕﾆｯﾄ下 | | |

## 28 給紙ﾕﾆｯﾄ下 (Paper feed unit lower)

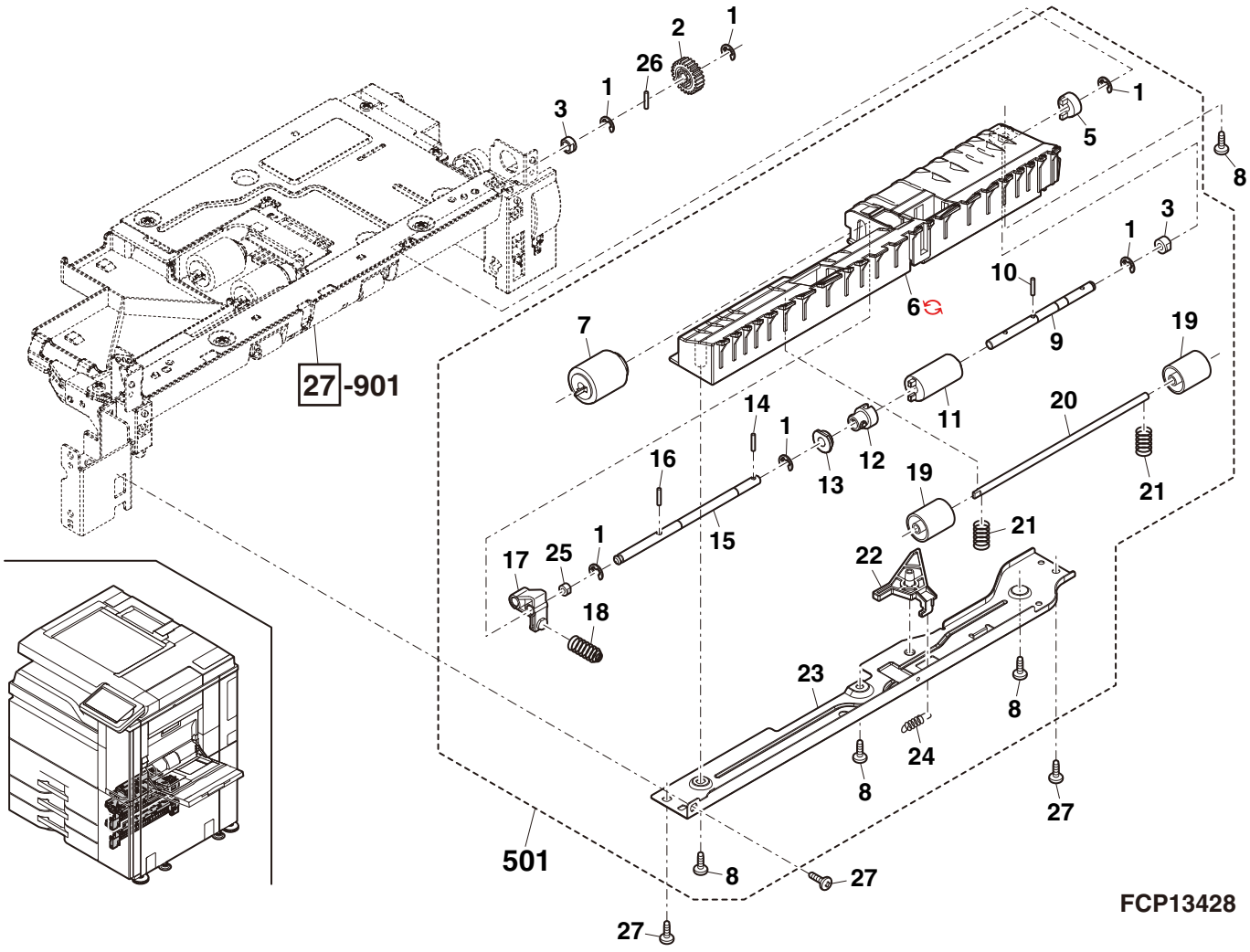

## 29 給紙ﾕﾆｯﾄ上搬送部 (Paper feed unit transport section)

| NO. | PARTS CODE | PRICE RANK Ex. | PRICE RANK Ja. | NEW MARK | PART RANK | DESCRIPTION | |
|---|---|---|---|---|---|---|---|
| 1 | NROLR1606FCZZ | AP | EQ | | C | Paper feed transport roller 4 | 給紙搬送ﾛｰﾗｰ 4 |
| 3 | XRESP70-08000 | AA | DD | | C | E ring(E7) | E ﾘﾝｸﾞ |
| 4 | NBLTH0501FCZ1 | AG | FG | | B | Paper feed transport belt | 給紙搬送ﾍﾞﾙﾄ |
| 5 | NPLYZ0484FCZZ | AP | EQ | | C | Transport pulley 4 | 搬送ﾌﾟｰﾘｰ 4 |
| 6 | LPiNS0337FCZZ | AB | DJ | | C | Pin(φ3-12) | 平行ﾋﾟﾝ |
| 7 | NBRGY0466FCZ1 | AK | DX | | C | Bearing(φ8-16) | 軸受 |
| 8 | PGiDM2232FCZZ | AN | EG | | C | Paper feed transport PG | 給紙縦搬送 PG |
| 9 | XHBS740P08000 | AA | DD | | C | Screw(4×8) | ﾋﾞｽ |
| 10 | PGiDM2125FCZZ | AL | EB | | C | Paper feed PG | 給紙 PG |
| 11 | NBRGP0782FCZ1 | AE | DS | | C | Movable PG bearing | 可動 PG 軸受 |
| | (Unit) | | | | | | |
| 901 | CGiDM2415FC53 | BZ | TF | N | E | Paper feed unit upper [Include Block[27]-901] | 給紙ﾕﾆｯﾄ上 |
| 902 | DUNT-8754FCZZ | BV | RB | N | E | Paper feed unit [Include Block[27]-901,[28]] | 給紙ﾕﾆｯﾄ |
| | | | | | | | |
| | | | | | | | |
| | | | | | | | |
| | | | | | | | |
| | | | | | | | |

## 29 給紙ﾕﾆｯﾄ上搬送部 (Paper feed unit transport section)

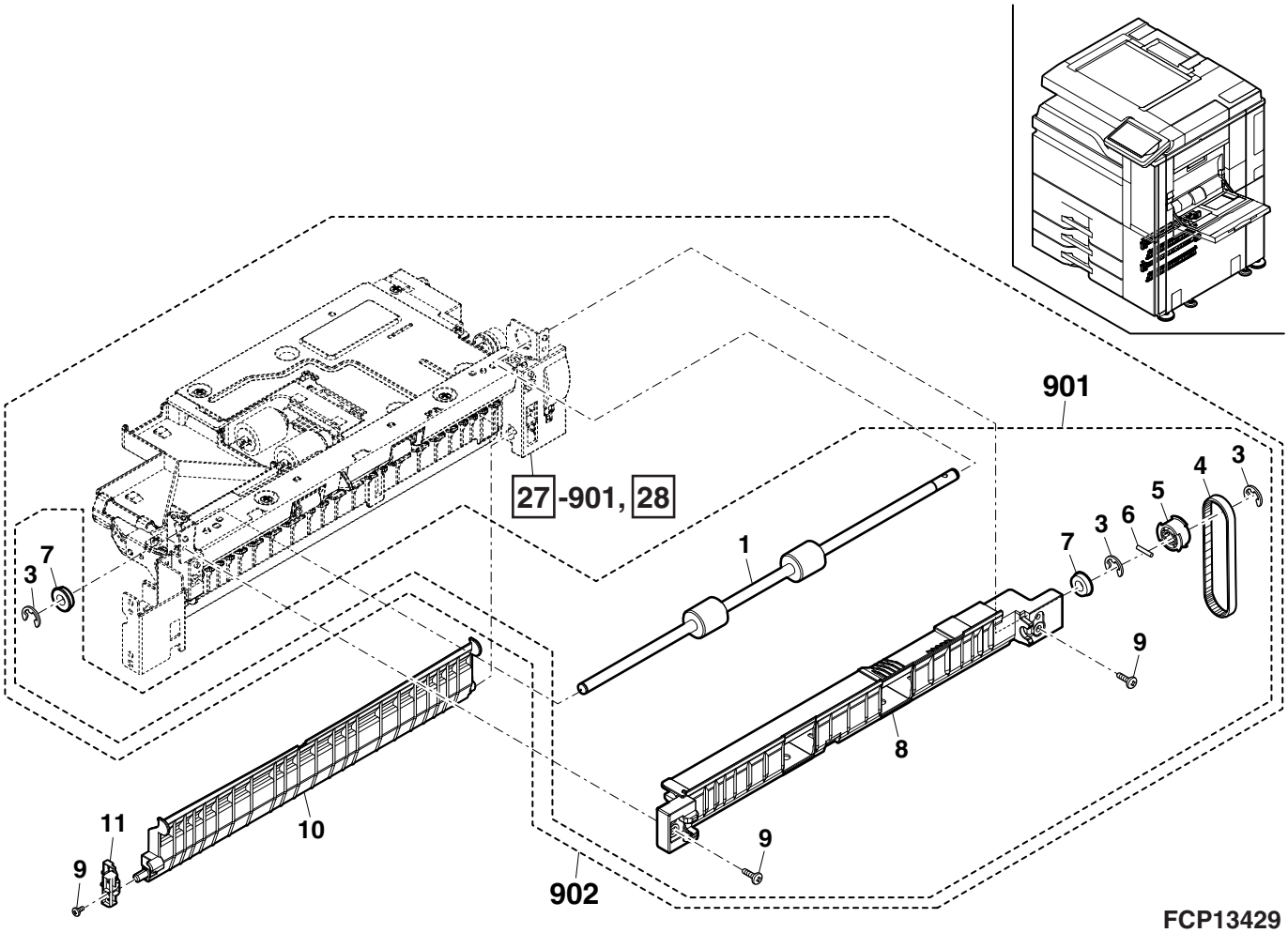

## 30 右縦搬送ﾕﾆｯﾄ (Right vertical transport unit)

| NO. | PARTS CODE | PRICE RANK | | NEW MARK | PART RANK | DESCRIPTION | |
|---|---|---|---|---|---|---|---|
| | | Ex. | Ja. | | | | |
| 1 | NBRGP0588FCZZ | AC | DJ | | C | Collar follower bearing | ｺﾛ従動軸受 |
| 2 | MSPRC2634FCZZ | AB | DJ | | C | Transport collar pressure spring | 搬送ｺﾛ圧接ｽﾌﾟﾘﾝｸﾞ |
| 3 | PGiDM2222FCZZ | BD | GN | | C | Right vertical transport PG | 右縦搬送 PG |
| 4 | NSFTZ3072FCZZ | AK | EB | | C | Right vertical transport follower shaft | 右縦搬送従動軸 |
| 5 | NROLP1468FCZZ | AE | DJ | | C | Transport follower roller | 搬送従動ﾛｰﾗｰ |
| 6 | XRESP50-06000 | AA | DD | | C | E ring(E5) | E ﾘﾝｸﾞ |
| 7 | XRESP40-05000 | AA | DD | | C | E ring(E4) | E ﾘﾝｸﾞ |
| 8 | PTPE-0294FCZZ | AA | DJ | | C | Plate fixing tape | ﾌﾟﾚｰﾄ取付ﾃｰﾌﾟ |
| 9 | LPLTM7028FCZZ | AN | EQ | | C | Transport plate R | 搬送ﾌﾟﾚｰﾄ R |
| 10 | LPLTM7027FCZZ | AN | EG | | C | Transport plate F | 搬送ﾌﾟﾚｰﾄ F |
| 11 | MSPRP3277FCZZ | AC | DJ | | C | U-turn PG fixing spring | Uﾀｰﾝ PG 押えﾊﾞﾈ |
| 12 | XEBS730P08000 | AC | DD | | C | Screw(3×8) | ﾋﾞｽ |
| 13 | CPLTM6876FC01 | AG | DS | | C | Fulcrum adjust plate | 支点軸調整板 |
| 14 | XHBS740P08000 | AA | DD | | C | Screw(4×8) | ﾋﾞｽ |
| 15 | LPLTM6879FCZZ | AW | FG | | C | Right transport PG reinforce plate | 右縦搬送 PG 補強板 |
| 16 | MSPRC3652FCZZ | AC | DJ | | C | Right transport follower spring | 右搬送従動ｽﾌﾟﾘﾝｸﾞ |
| 17 | XEBS740P10000 | AA | DD | | C | Screw(4×10) | ﾋﾞｽ |
| 18 | PSHEP5618FCZZ | AC | DJ | | C | Right vertical transport sheet | 右縦搬送ｼｰﾄ |
| 19 | NSFTZ3073FCZZ | AH | DX | | C | Right release lever shaft | 右解除ﾚﾊﾞｰ軸 |
| 20 | MLEVP1022FCZZ | AD | DJ | | C | Right vertical transport PG release lever | 右縦搬送 PG 解除ﾚﾊﾞｰ |
| 21 | XBPS730P06000 | AA | DD | | C | Screw(3×6) | ﾋﾞｽ |
| 22 | PTME-0284FCZZ | AE | DS | | C | Desk left door lock pawl | ﾃﾞｽｸ左ﾄﾞｱﾛｯｸ爪 |
| 23 | MSPRD3546FCZZ | AC | DJ | | C | Right release lever return spring | 右解除ﾚﾊﾞｰ復帰ｽﾌﾟﾘﾝｸﾞ |
| 24 | JHNDP0189FCZZ | AF | DS | | C | Right release handle | 右解除用ﾊﾝﾄﾞﾙ |
| 25 | LHLDZ1469FCZZ | AE | DJ | | C | Upper transport fulcrum holder | 上搬送支点ﾎﾙﾀﾞｰ |
| 26 | LPLTM6874FCZZ | AF | DS | | C | Right vertical transport PG reinforce plate F | 右縦搬送 PG 補強板 F |
| 27 | LSTPP0011QSZZ | AC | DJ | | C | Resin ring(E3) | 樹脂ﾘﾝｸﾞ |
| 28 | CPLTM6876FC02 | AH | DX | | C | Fulcrum adjust plate | 支点軸調整板 |
| 29 | PSHEP5674FCZZ | AL | EB | | C | Right vertical transport shade sheet | 右縦搬送遮蔽ｼｰﾄ |
| | (Unit) | | | | | | |
| 901 | CGiDM2222DS52 | BN | HZ | | E | Right vertical transport unit | 右縦搬送ﾕﾆｯﾄ |
| | | | | | | | |
| | | | | | | | |

## 30 右縦搬送ﾕﾆｯﾄ (Right vertical transport unit)

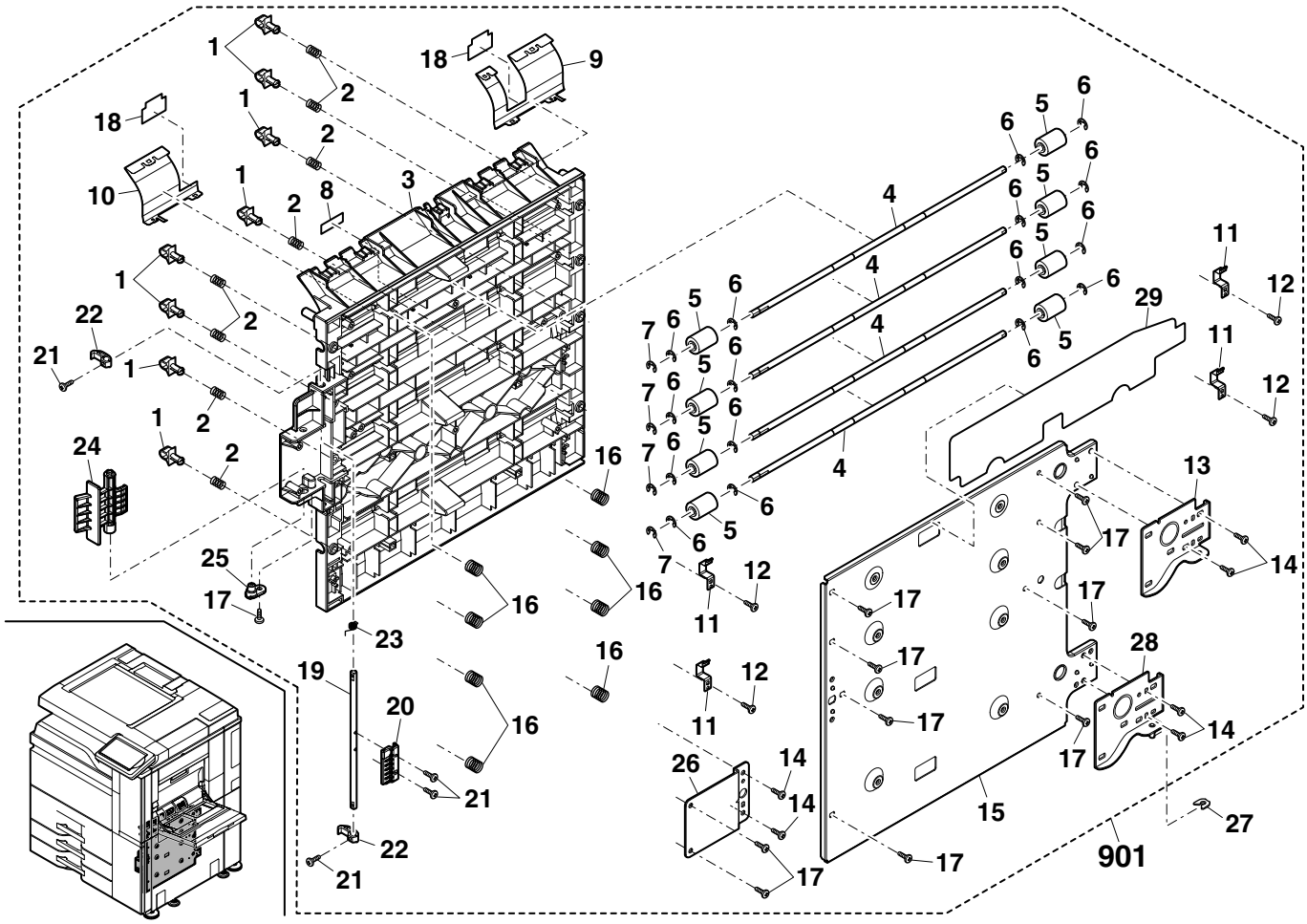

FCP13430

## 31 縦搬送上ﾕﾆｯﾄ (Vertical transport upper unit)

| NO. | PARTS CODE | PRICE RANK | | NEW MARK | PART RANK | DESCRIPTION | |
|---|---|---|---|---|---|---|---|
| | | Ex. | Ja. | | | | |
| 1 | NROLR1603FCZZ | AQ | EQ | | C | Vertical transport roller | 縦搬送ﾛｰﾗｰ |
| 2 | XEBS730P08000 | AC | DD | | C | Screw(3×8) | ﾋﾞｽ |
| 3 | VHPGP2A200L-18 | AQ | EQ | | B | Photo sensor(GP2A200L) | ﾌｫﾄｾﾝｻｰ |
| 4 | DHAi-5051FCPZ | AG | DS | N | C | T2PPD harness | T2PPD ﾊｰﾈｽ |
| 5 | LHLDZ1762FCZZ | AD | DJ | | C | Follower roller holder | 従動ﾛｰﾗｰﾎﾙﾀﾞｰ |
| 6 | NROLP1351FCZZ | AG | DX | | C | Follower roller | 従動ﾛｰﾗｰ |
| 7 | PGiDM2221FCZZ | AR | EQ | | C | Vertical transport upper PG | 縦搬送上 PG |
| 8 | XRESP70-08000 | AA | DD | | C | E ring(E7) | E ﾘﾝｸﾞ |
| 9 | NGERH1744FCZZ | AR | EQ | | C | Gear(20T) | ｷﾞﾔ |
| 10 | LPiNS0337FCZZ | AB | DJ | | C | Pin(φ3-12) | 平行ﾋﾟﾝ |
| 11 | PCLR-0538FCZZ | AR | EQ | | C | Gear collar(φ24.2) | ｷﾞﾔｶﾗｰ |
| 12 | NBRGY0466FCZ1 | AK | DX | | C | Bearing(φ8-16) | 軸受 |
| 13 | XEBS740P10000 | AA | DD | | C | Screw(4×10) | ﾋﾞｽ |
| 14 | LPLTM6867FCZZ | AF | DS | | C | Vertical transport fixing plate R | 縦搬送上取付板 R |
| 15 | XHBS740P08000 | AA | DD | | C | Screw(4×8) | ﾋﾞｽ |
| 16 | LPLTM6869FCZZ | AG | DX | | C | Vertical transport reinforce plate | 縦搬送上補強板 |
| 17 | PGiDM2220FCZZ | AV | FG | | C | Tandem right PG | ﾀﾝﾃﾞﾑ右 PG |
| 18 | MLEVP0908FCAZ | AF | DJ | | C | Open/close detect actuator lower | 開閉検知ｱｸﾁｭｴｰﾀｰ下 |
| 19 | MSPRT3195FCZZ | AC | DJ | | C | ADU gate return spring | ADU ｹﾞｰﾄ復帰ｽﾌﾟﾘﾝｸﾞ |
| 20 | LPLTM6868FCZ1 | AL | EB | | C | Vertical transport fixing plate F | 縦搬送上取付板 F |
| 21 | QEARP0158FCZZ | AB | DJ | | C | Interface pass earth plate | 中継ﾊﾟｽｱｰｽ板 |
| 22 | XHBS730P06000 | AC | DD | | C | Screw(3×6) | ﾋﾞｽ |
| 23 | LDAiU0866FCZZ | AE | DS | N | D | Right transport fixing block | 右搬送固定ﾌﾞﾛｯｸ |
| 24 | VHPGP1A73A+-18 | AF | DS | | B | Photo sensor(GP1A73A) | ﾌｫﾄｾﾝｻｰ |
| | (Unit) | | | | | | |
| 901 | CGiDM2221DS53 | BL | HL | N | E | Vertical transport upper unit | 縦搬送上ﾕﾆｯﾄ |
| | | | | | | | |
| | | | | | | | |
| | | | | | | | |

## 31 縦搬送上ﾕﾆｯﾄ (Vertical transport upper unit)

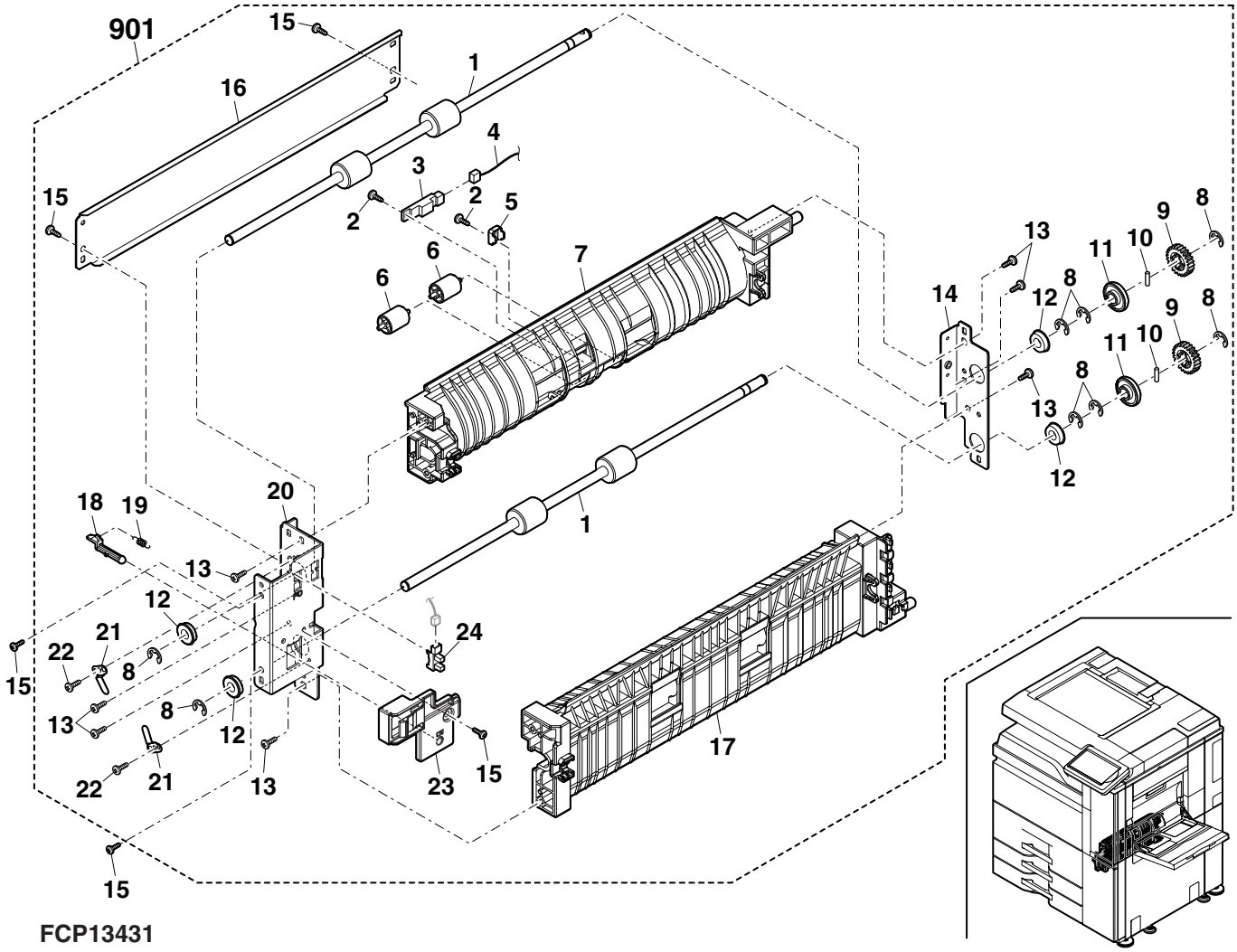


FCP13431

## 32 手差し給紙ﾄﾚｲ ,MX-MF10(Manual paper feed tray,MX-MF10)

| NO. | PARTS CODE | Inter-change | PRICE RANK Ex. | PRICE RANK Ja. | NEW MARK | PART RANK | DESCRIPTION | | TR No. | Effective time |
|---|---|---|---|---|---|---|---|---|---|---|
| 1 | LSOU-0257FCZZ | | AT | EZ | N | D | MF tray upper | MF ﾄﾚｲ上 | | |
| 2 | LPLTP8378FCZZ | | AG | DX | N | D | MF regulation plate F | MF 規制板 F | | |
| 3 | LPLTP8379FCZZ | | AG | DX | N | D | MF regulation plate R | MF 規制板 R | | |
| 4 | MARMP0322FCZZ | | AC | DJ | | C | MF tray arm | MF ﾄﾚｲｱｰﾑ | | |
| 5 | XHBS740P08000 | | AA | DD | | C | Screw(4×8) | ﾋﾞｽ | | |
| 6 | CPLTM6610FC02 | | AE | DJ | | C | MF tray arm plate | MF ﾄﾚｲｱｰﾑﾌﾟﾚｰﾄ | | |
| 7 | TLABZ5622FCZZ | | AH | DX | | D | Size display label(Refer to Matrix) | ｻｲｽﾞ表示ﾗﾍﾞﾙ | | |
| | TLABZ5633FCZZ | | AL | EB | N | D | Size display label(Refer to Matrix) | ｻｲｽﾞ表示ﾗﾍﾞﾙ | | |
| | TLABZ5622FCA1 | | | | N | D | Size display label(Refer to Matrix) | ｻｲｽﾞ表示ﾗﾍﾞﾙ | | 1st lot |
| 8 | TLABH5576FCZZ | | AD | DJ | | D | MF paper direction label | MF 用紙方向 ﾗﾍﾞﾙ | | |
| 9 | NGERR2249FCZZ | | AG | DS | N | C | MF width detect rack | MF 幅検知ﾗｯｸ | | |
| 10 | NGERP2250FCZZ | | AE | DS | N | C | MF width detect pinion gear | MF 幅検知ﾋﾟﾆｵﾝ ｷﾞﾔ | | |
| 11 | XEPS730P08X00 | | AA | DD | | C | Screw(3×8X) | ﾋﾞｽ | | |
| 12 | LX-BZ1281FCZZ | | | | N | C | Screw | ﾋﾞｽ | | 1st lot |
| 13 | LPLTM8354FCZZ | | AH | DX | N | C | MF width detect fixing plate | MF 幅検知 取付板 | | |
| 14 | MSPRP3331FCZZ | | AB | DJ | | C | MF width detect plate spring | MF 幅検知板 ｽﾌﾟﾘﾝｸﾞ | | |
| 15 | CPWBF0106QSE5 | | AL | EB | | E | Volume PWB | ﾎﾞﾘｭｰﾑ基板 | | |
| 16 | XEBS730P08000 | | AC | DD | | C | Screw(3×8) | ﾋﾞｽ | | |
| 17 | DHAi-5081FCPZ | | AN | EG | N | C | Manual paper tray harness | 手差ﾄﾚｲﾊｰﾈｽ | | |
| 18 | LSOU-0259FCZZ | | AS | EZ | N | D | MF tray lower upper rear | MF ﾄﾚｲ上後 | | |
| 19 | LSOU-0258FCZZ | | AZ | FQ | N | D | MF tray lower | MF ﾄﾚｲ下 | | |
| 20 | PCOVP2482FCZZ | | AE | DS | N | D | MF harness cover | MF ﾊｰﾈｽｶﾊﾞｰ | | |
| 21 | MLEVP0929FCZ1 | | AC | DJ | | C | MF paper detect actuator | MF 用紙検知 ｱｸﾁｭｴｰﾀｰ | | |
| 22 | MLOKZ0012FCZZ | | AC | DJ | | C | ADU open/close door lock | ADU開閉ﾄﾞｱﾛｯｸ | | |
| 23 | MSPRC4223FCZZ | | AC | DJ | | C | Open/close lock spring | 開閉ﾛｯｸｽﾌﾟﾘﾝｸﾞ | | |
| 24 | VHPSG2A141+-1 | | AF | DS | | B | Photo sensor(SG2A141) | ﾌｫﾄｾﾝｻｰ | | |
| 25 | NSFTZ3706FCZZ | | AD | DJ | N | C | MF tray fulcrum shaft | MF ﾄﾚｲ支点軸 | | |
| 26 | PGiDH2691FCZZ | | AH | DX | N | C | MF support guide | MF 補助ｶﾞｲﾄﾞ | | |
| 27 | GCOV-0252FCZZ | | AG | DS | | D | Screw cover | ﾋﾞｽｶﾊﾞｰ | | |
| | (Unit) | | | | | | | | | |
| 901 | CSOU-0258DS51 | | BQ | LP | N | E | Manual paper tray unit(Refer to Matrix) | 手差ﾄﾚｲﾕﾆｯﾄ | | |
| | CSOU-0258DS52 | | BQ | LP | N | E | Manual paper tray unit(Refer to Matrix) | 手差ﾄﾚｲﾕﾆｯﾄ | | |
| | CSOU-0258DS53 | | | | N | E | Manual paper tray unit(Refer to Matrix) | 手差ﾄﾚｲﾕﾆｯﾄ | | 1st lot |

## Matrix

| No.7 | ｻｲｽﾞ表示ﾗﾍﾞﾙ (Size display label) | | | | | | | | | | | | | | |
|---|---|---|---|---|---|---|---|---|---|---|---|---|---|---|---|
| PARTS CODE | MX-7040N MX-6240N | | MX-6540FN | MX-MF10 | | | | | | | | | | | |
| | Australia,Asia, South Africa | Taiwan | Japan（日本） | Americas, Europe | | | | | | | | | | | |
| TLABZ5622FCZZ | | | 1st lot | 1st lot | | | | | | | | | | | |
| TLABZ5633FCZZ | 1st lot | | | | | | | | | | | | | | |
| TLABZ5622FCA1 | | 1st lot | | | | | | | | | | | | | |

32 手差し給紙ﾄﾚｲ ,MX-MF10(Manual paper feed tray,MX-MF10)

## Matrix

| No.901 | 手差ﾄﾚｲﾕﾆｯﾄ (Manual paper tray unit) | | | | | | | | | | | | | | |
|---|---|---|---|---|---|---|---|---|---|---|---|---|---|---|---|
| PARTS CODE | MX-7040N MX-6240N | | MX-6540FN | MX-MF10 | | | | | | | | | | | |
| | Australia,Asia, South Africa | Taiwan | Japan（日本） | Americas, Europe | | | | | | | | | | | |
| CSOU-0258DS51 | | | 1st lot | 1st lot | | | | | | | | | | | |
| CSOU-0258DS52 | 1st lot | | | | | | | | | | | | | | |
| CSOU-0258DS53 | | 1st lot | | | | | | | | | | | | | |

## 32 手差し給紙ﾄﾚｲ ,MX-MF10(Manual paper feed tray,MX-MF10)

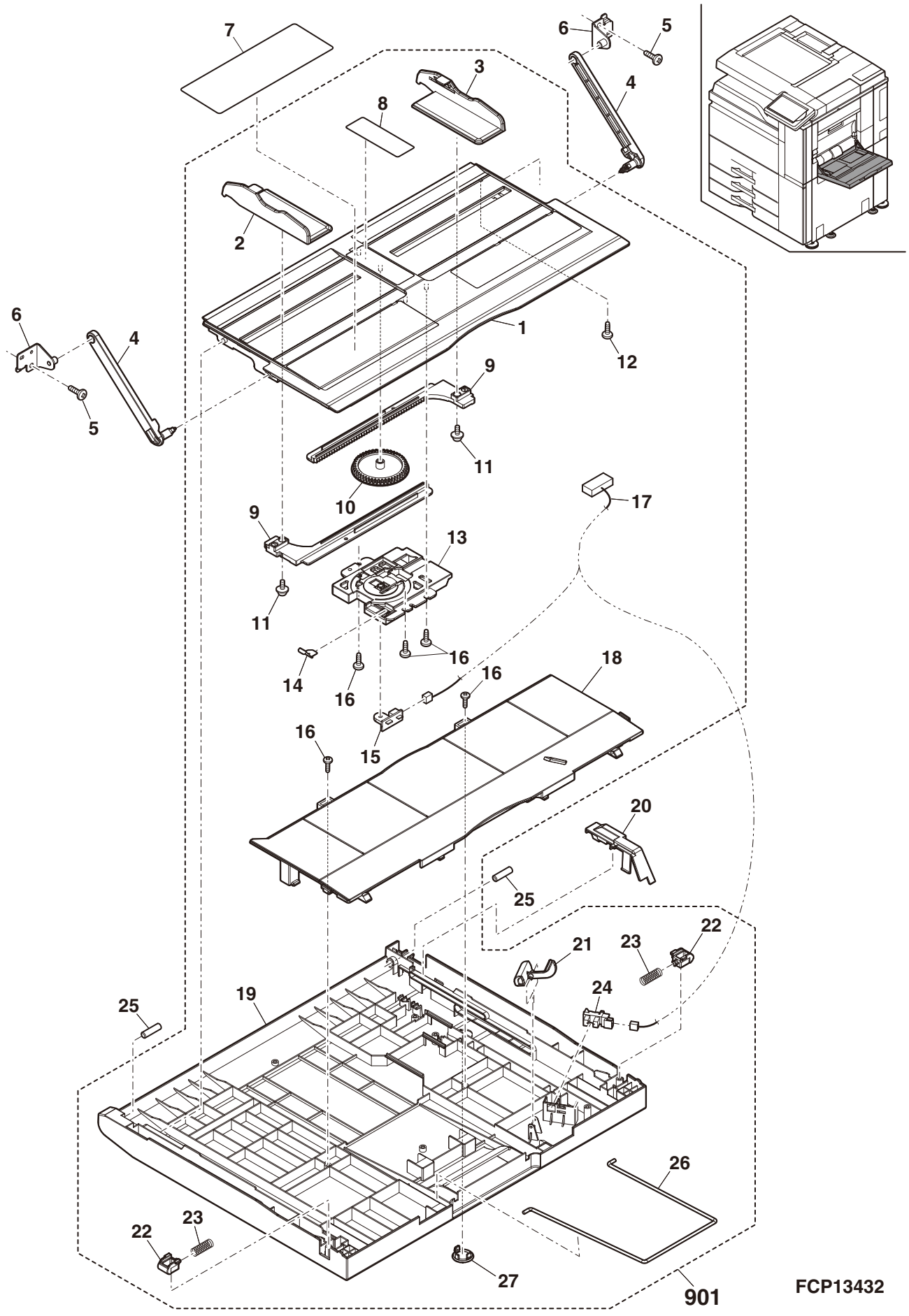

## 33 手差し給紙ﾕﾆｯﾄ 1,MX-MF10(Manual paper feed unit 1,MX-MF10)

| NO. | PARTS CODE | Inter-change | PRICE RANK Ex. | PRICE RANK Ja. | NEW MARK | PART RANK | DESCRIPTION | | TR No. | Effective time |
|---|---|---|---|---|---|---|---|---|---|---|
| 1 | PGiDM2631FCZZ | | | | N | D | MF ADU PG | MF ADU PG | | |
| 2 | CPLTM8351FC01 | | | | N | C | MF upper guide reinforce plate | MF 上ｶﾞｲﾄﾞ 補強板 | | |
| 3 | XBBS730P04000 | | AA | DD | | C | Screw(3×4) | ﾋﾞｽ | | |
| 4 | XEBS740P10000 | | AA | DD | | C | Screw(4×10) | ﾋﾞｽ | | |
| 5 | RPLU-0372FCZZ | | BG | GX | | B | Manual paper feed pick solenoid | 手差ﾋﾟｯｸｿﾚﾉｲﾄﾞ | | |
| 6 | MARMP0506FCZZ | | AL | EB | N | C | MF pick up solenoid arm | MF ﾋﾟｯｸｱｯﾌﾟ ｿﾚﾉｲﾄﾞｱｰﾑ | | |
| 7 | XHBS730P08000 | | AB | DD | | C | Screw(3×8) | ﾋﾞｽ | | |
| 8 | MSPRT4348FCZZ | | | | N | C | MF pick up solenoid spring | MF ﾋﾟｯｸｱｯﾌﾟ ｿﾚﾉｲﾄﾞｽﾌﾟﾘﾝｸﾞ | | |
| 9 | PGiDM2634FCZZ | | BA | FX | N | C | MF transport PG | MF 搬送 PG | | |
| 10 | VHPSG2A141+-1 | | AF | DS | | B | Photo sensor(SG2A141) | ﾌｫﾄｾﾝｻｰ | | |
| 11 | LPLTP5827FCZZ | | AF | DS | | C | Multi sensor fixing plate | ﾏﾙﾁｾﾝｻｰ取付板 | | |
| 12 | XEBS730P08000 | | AC | DD | | C | Screw(3×8) | ﾋﾞｽ | | |
| 13 | MSPRD4366FCZZ | | BB | GD | | C | MF pick spring | MF ﾋﾟｯｸｽﾌﾟﾘﾝｸﾞ | | |
| 14 | NSFTZ3636FCZZ | | | | N | C | MF PF roller shaft | MF 給紙ﾛｰﾗｰ軸 | | |
| 15 | PGiDM2632FCZZ | | BC | GJ | N | C | MF upper base PG | MF 上ﾍﾞｰｽ PG | | |
| 16 | NROLR1466FCZ1 | | AN | DX | | C | Paper feed separate roller | 給紙分離ﾛｰﾗｰ | | |
| 17 | NPLYZ0439FCZZ | | AC | DJ | | C | MF drive pulley | 手差し駆動 ﾌﾟｰﾘｰ | | |
| 18 | NCPL-0081FCZZ | | AH | DX | | C | One way coupling | ﾜﾝｳｪｲｶｯﾌﾟﾘﾝｸﾞ | | |
| 19 | NBRGM0096FCZ1 | | AC | DJ | | C | Bearing(φ6) | 軸受 | | |
| 20 | MARMP0507FCZZ | | AP | EQ | N | C | MF pick up arm | MF ﾋﾟｯｸｱｯﾌﾟｱｰﾑ | | |
| 21 | NSFTZ2936FCZZ | | AN | EG | | C | MF pick up roller shaft | MF ﾋﾟｯｸｱｯﾌﾟ ﾛｰﾗｰ軸 | | |
| 22 | NPLYZ0438FCZZ | | AC | DJ | | C | Pick up roller pulley(22P) | 呼込みﾛｰﾗｰ ﾌﾟｰﾘｰ | | |
| 23 | NBLTH0453FCZZ | | AQ | EQ | | B | MF pick up belt | MF ﾋﾟｯｸｱｯﾌﾟ ﾍﾞﾙﾄ | | |
| 24 | NROLR1467FCZ2 | | AN | EQ | | C | Pick up roller | 呼込みﾛｰﾗｰ | | |
| 25 | MSPRD3423FCZZ | | AB | DJ | | C | MF paper existence sensor actuator spring | MF 用紙有無 ｾﾝｻｰｱｸﾁｪｰﾀｰ ｽﾌﾟﾘﾝｸﾞ | | |
| 26 | MLEVP0939FCZZ | | AD | DJ | | C | MF paper existence sensor actuator | MF 用紙有無 ｾﾝｻｰｱｸﾁｪｰﾀｰ | | |
| 27 | PCOVP1834FCZ1 | | AH | DX | | D | MF pick up cover | MF ﾋﾟｯｸｱｯﾌﾟ ｶﾊﾞｰ | | |
| 28 | XRESP50-06000 | | AA | DD | | C | E ring(E5) | E ﾘﾝｸﾞ | | |
| 29 | NBRGY0715FCZ2 | | AM | EG | | C | Bearing(φ6-10) | 軸受 | | |
| 30 | LPiNS0133FCZZ | | AA | DD | | C | Pin(φ2-10) | 平行ﾋﾟﾝ | | |
| 31 | NGERH1510FCZZ | | AD | DJ | | C | Gear(20T) | ｷﾞﾔ | | |
| 32 | PSHEZ6465FCZZ | | | | N | C | Pick up silence sheet | ﾋﾟｯｸｱｯﾌﾟ消音 ｼｰﾄ | | |
| 33 | XRESP40-06000 | | AA | DD | | C | E ring(E4) | E ﾘﾝｸﾞ | | |
| 34 | LHLDW5031BCZZ | | AA | DD | | C | Clamp | ｸﾗﾝﾌﾟ | | |

## 33 手差し給紙ﾕﾆｯﾄ 1,MX-MF10(Manual paper feed unit 1,MX-MF10)

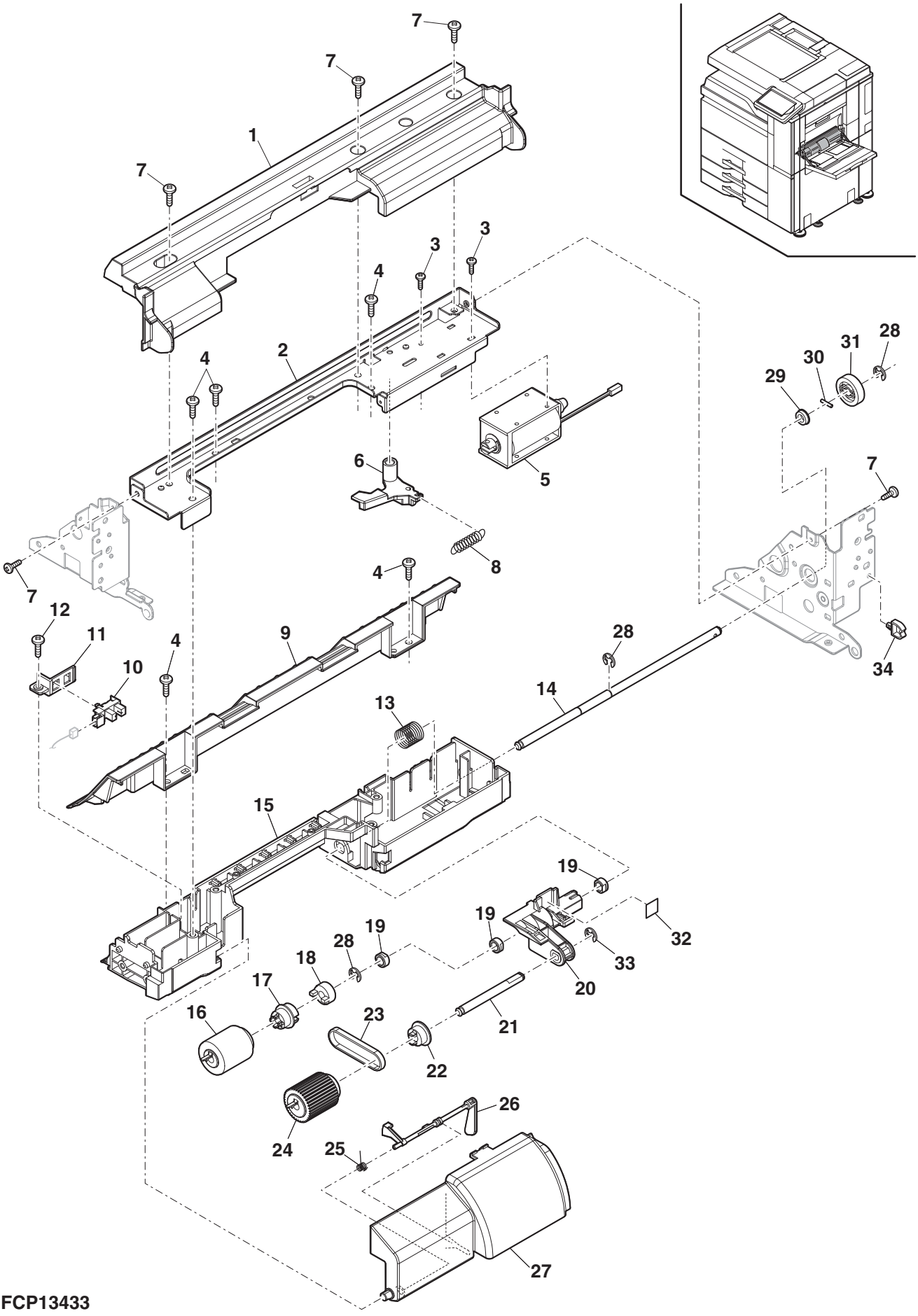


FCP13433

## 34 手差し給紙ユニット 2,MX-MF10(Manual paper feed unit 2,MX-MF10)

| NO. | PARTS CODE | Inter-change | PRICE RANK Ex. | PRICE RANK Ja. | NEW MARK | PART RANK | DESCRIPTION | | TR No. | Effective time |
|---|---|---|---|---|---|---|---|---|---|---|
| 1 | PCOVP2521FCZZ | | AE | DS | N | C | MF maintenance cover | MF ﾒﾝﾃﾅﾝｽｶﾊﾞｰ | | |
| 2 | PSHEZ5462FCZ1 | | AD | DJ | | C | Front separate sheet | 前ｻﾊﾞｷｼｰﾄ | | |
| 3 | XEBS740P10000 | | AA | DD | | C | Screw(4×10) | ﾋﾞｽ | | |
| 4 | NBRGY0720FCZ1 | | AQ | EQ | | C | Bearing(φ6-13) | 軸受 | | |
| 5 | XRESP50-06000 | | AA | DD | | C | E ring(E5) | E ﾘﾝｸﾞ | | |
| 6 | NBRGY0715FCZ2 | | AM | EG | | C | Bearing(φ6-10) | 軸受 | | |
| 7 | LPiNS0133FCZZ | | AA | DD | | C | Pin(φ2-10) | 平行ﾋﾟﾝ | | |
| 8 | NGERH1510FCZZ | | AD | DJ | | C | Gear(20T) | ｷﾞﾔ | | |
| 9 | NGERH1740FCZZ | | AS | EQ | | C | MF separate gear(18T) | MF 分離ｷﾞﾔ | | |
| 11 | CFRM-1559FC01 | | AP | EQ | N | C | MF frame R | MF ﾌﾚｰﾑ R | | |
| 12 | NBRGM0096FCZ1 | | AC | DJ | | C | Bearing(φ6) | 軸受 | | |
| 13 | MSPRC4367FCZZ | | AH | DX | | C | MF slider spring | MF ｽﾗｲﾀﾞｰ ｽﾌﾟﾘﾝｸﾞ | | |
| 14 | MSLiP0173FCZZ | | AK | DX | N | C | MF slider R | MF ｽﾗｲﾀﾞｰ R | | |
| 15 | NROLR1961FCZZ | | AS | EQ | N | C | MF transport roller | MF 搬送ﾛｰﾗｰ | | |
| 16 | PSHEZ5763FCZZ | | AQ | DJ | | C | Pick up pad | 呼込みﾊﾟｯﾄ | | |
| 17 | PMLT-1540FCZZ | | AC | DJ | | C | LCC transport cushion | LCC 搬送ﾓﾙﾄ | | |
| 18 | PGiDM2633FCZZ | | BH | GX | N | C | MF lower PG | MF 下 PG | | |
| 19 | NGERH1634FCZZ | | AR | EQ | | C | Separate gear(18T) | 分離ｷﾞﾔ | | |
| 20 | MSLiP0172FCZZ | | AK | DX | N | C | MF slider F | MF ｽﾗｲﾀﾞｰ F | | |
| 21 | CFRM-1558FC01 | | AW | FG | N | C | MF frame F | MF ﾌﾚｰﾑ F | | |
| 22 | VHPSG2A141+-1 | | AF | DS | | B | Photo sensor(SG2A141) | ﾌｫﾄｾﾝｻｰ | | |
| 23 | DHAi-5082FCPZ | | AR | EQ | N | C | Multi unit harness | ﾏﾙﾁﾕﾆｯﾄﾊｰﾈｽ | | |
| 24 | XRESP30-06000 | | AA | DD | | C | E ring(E3) | E ﾘﾝｸﾞ | | |
| 25 | MSPRD3667FCZZ | | AC | DJ | | C | MF stopper spring | MF ｽﾄｯﾊﾟｰ ｽﾌﾟﾘﾝｸﾞ | | |
| 26 | LSTPP0388FCZ1 | | AM | EB | | C | Stopper | ｽﾄｯﾊﾟｰ | | |
| 27 | MLEVP1246FCZZ | | AD | DJ | N | C | MF PF sensor actuator | MF 入紙ｾﾝｻｰ A ｱｸﾁｭｴｰﾀｰ | | |
| 28 | MSPRD4296FCZZ | | AE | DJ | N | C | MF transport actuator spring | MF 搬送 ｱｸﾁｭｴｰﾀｰ ｽﾌﾟﾘﾝｸﾞ | | |
| 29 | MSPRC4297FCZZ | | AE | DS | N | C | MF transport PG follower spring | MF 搬送 PG 従動ｽﾌﾟﾘﾝｸﾞ | | |
| 30 | NROLP1468FCZZ | | AE | DJ | | C | Transport follower roller | 搬送従動ﾛｰﾗｰ | | |
| 31 | NSFTZ3641FCZZ | | AK | DX | N | C | MF Transport PG follower shaft | MF 搬送 PG 従動軸 | | |
| 32 | MARMP0327FCZZ | | AC | DJ | | C | MF stop arm | MF ｽﾄｯﾌﾟｱｰﾑ | | |
| 33 | RPLU-0353FCPZ | | AQ | EQ | | B | Gate solenoid | ｹﾞｰﾄｿﾚﾉｲﾄﾞ | | |
| 34 | MSPRC3410FCZZ | | AC | DJ | | C | ADU follower roller spring upper | ADU 従動ﾛｰﾗｰ ｽﾌﾟﾘﾝｸﾞ 上 | | |
| 35 | NSFTZ3637FCZZ | | AW | FG | N | C | MF LCC transport follower shaft | MF LCC 搬送 従動軸 | | |
| 36 | NROLR1466FCZ1 | | AN | DX | | C | Paper feed separate roller | 給紙分離ﾛｰﾗｰ | | |
| 37 | NSFTZ2934FCZZ | | AR | EQ | | C | MF separate roller shaft | MF 分離ﾛｰﾗｰ軸 | | |
| 38 | LHLDZ1630FCZZ | | AC | DJ | | C | MF separate roller rotation fulcrum holder | MF 分離ﾛｰﾗｰ 回転支点ﾎﾙﾀﾞｰ | | |
| 39 | NCPL-0067FCZZ | | AD | DJ | | C | Separate coupling | 分離ｶｯﾌﾟﾘﾝｸﾞ | | |
| 40 | LPiNS0333FCZZ | | AB | DJ | | C | Spring pin(φ2-12) | ｽﾌﾟﾘﾝｸﾞﾋﾟﾝ | | |
| 41 | PCLC-0370FCZZ | | BB | GD | | B | Torque limiter CD-M | ﾄﾙｸﾘﾐｯﾀｰ CD-M | | |
| 42 | NSFTZ3638FCZZ | | AL | EB | N | C | MF separate coupling shaft | MF 分離 ｶｯﾌﾟﾘﾝｸﾞ軸 | | |
| 43 | NCPL-0081FCZZ | | AH | DX | | C | One way coupling | ﾜﾝｳｪｲｶｯﾌﾟﾘﾝｸﾞ | | |
| 44 | LPLTM8352FCZZ | | AZ | FX | N | C | MF lower base reinforce plate | MF 下ﾍﾞｰｽ 補強板 | | |
| 45 | MSPRC4350FCZZ | | AF | DS | N | C | MF separate pressure spring | MF 分離圧接 ｽﾌﾟﾘﾝｸﾞ | | |
| 46 | PMLT-1447FCZ1 | | AA | DJ | | C | MF gate silence cushion | MF ｹﾞｰﾄ消音ﾓﾙﾄ | | |
| 47 | LPiNS0089FCZZ | | AA | DD | | C | SP pin(φ2-8) | SP ﾋﾟﾝ | | |
| 48 | XHBS730P08000 | | AB | DD | | C | Screw(3×8) | ﾋﾞｽ | | |
| 49 | LPiNS0334FCZZ | | AB | DJ | | C | Spring pin(φ3-14) | ｽﾌﾟﾘﾝｸﾞﾋﾟﾝ | | |
| 50 | PSHEZ6523FCZZ | | | | N | C | MF Front separate sheet lower | MF 前捌きｼｰﾄ下 | | |
| 51 | PSHEZ6524FCZ1 | | | | N | C | MF Pick up lower sheet | MF 呼込下ｼｰﾄ | | 1st lot |
| 52 | LX-WZ5002BCZZ | | AA | DD | | C | Poly Slider(φ6.2-12) | ﾎﾟﾘｽﾗｲﾀﾞｰ | | 1st lot |
| 53 | N LBNDJ0013FCZ1 | | AE | DJ | | C | Band | ﾊﾞﾝﾄﾞ | | 12/Apr |

## 34 手差し給紙ﾕﾆｯﾄ 2,MX-MF10(Manual paper feed unit 2,MX-MF10)

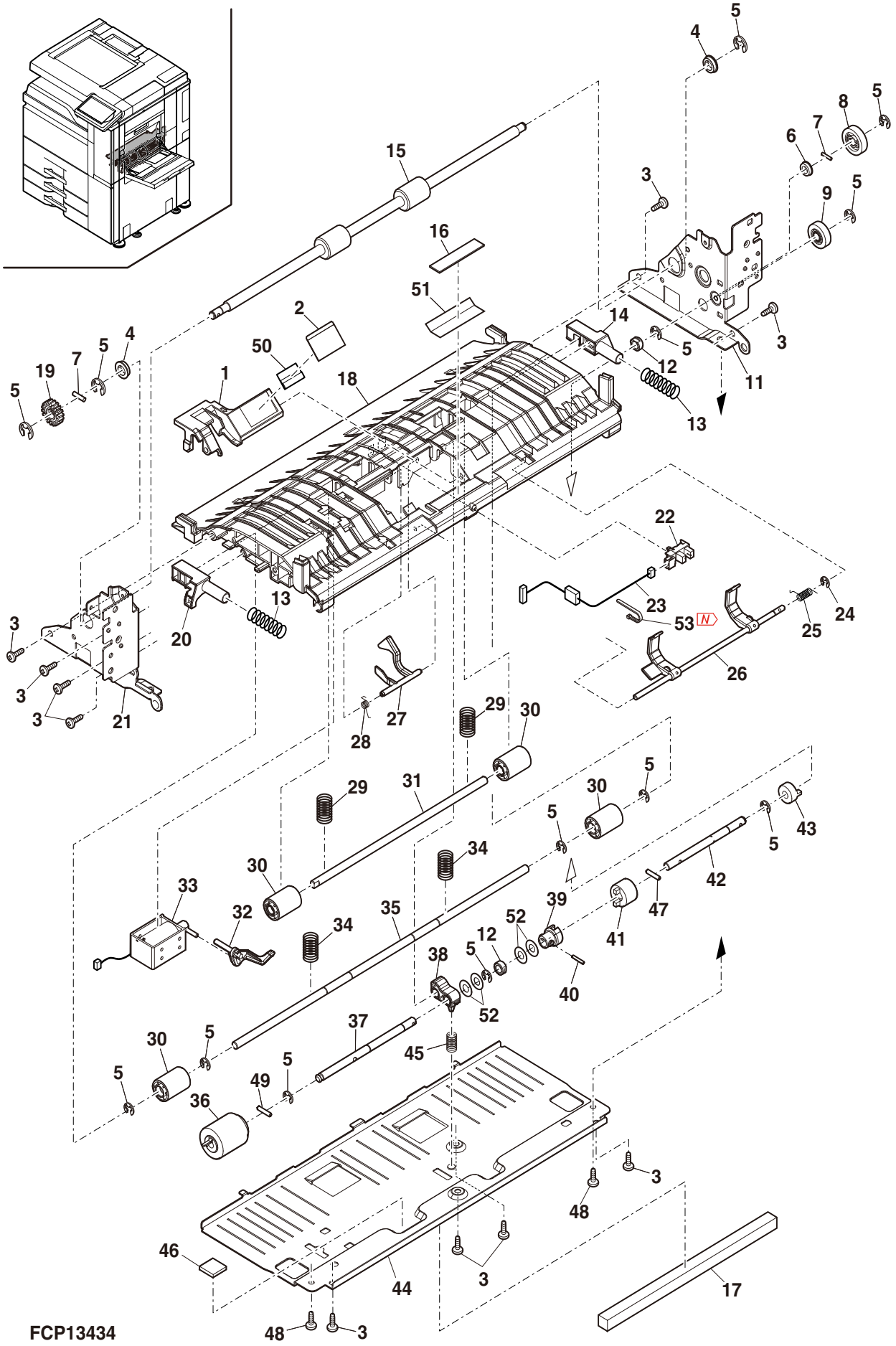

## 35 LCC 搬送ﾕﾆｯﾄ (LCC transport unit)

| NO. | PARTS CODE | Inter-change | PRICE RANK Ex. | PRICE RANK Ja. | NEW MARK | PART RANK | DESCRIPTION | | TR No. | Effective time |
|---|---|---|---|---|---|---|---|---|---|---|
| 1 | LPLTM8339FCZZ | | AK | DX | | C | Movable PG reinforce plate | 可動PG補強板 | | |
| 2 | GCAB-1426FCZZ | | AM | EG | | D | LCC upper cabinet | LCC上ｷｬﾋﾞ | | |
| 3 | XEBS740P10000 | | AA | DD | | C | Screw(4×10) | ﾋﾞｽ | | |
| 4 | XEBS730P08000 | | AC | DD | | C | Screw(3×8) | ﾋﾞｽ | | |
| 5 | MSPRC3545FCZZ | | AC | DJ | | C | LCC follower roller spring | LCC従動ﾛｰﾗｰｽﾌﾟﾘﾝｸﾞ | | |
| 6 | NROLP1468FCZZ | | AE | DJ | | C | Transport follower roller | 搬送従動ﾛｰﾗｰ | | |
| 7 | MLOKZ0014FCZZ | | AD | DJ | | C | Movable PG lock | 可動PGﾛｯｸ | | |
| 8 | PCLR-0501FCZZ | | AB | DJ | | C | Delivery guide collar | 排紙ｶﾞｲﾄﾞｺﾛ | | |
| 9 | DHAi-5050FCPZ | | AH | DX | | C | LPPD harness | LPPDﾊｰﾈｽ | | |
| 10 | VHPGP2A230L-1 | | AP | EQ | | B | Reflection sensor(GP2A230L) | 反射型ｾﾝｻｰ | | |
| 11 | MSPRC3544FCZZ | | AC | DJ | | C | Movable PG rock spring | 可動PGﾛｯｸｽﾌﾟﾘﾝｸﾞ | | |
| 12 | PGiDM2627FCZZ | | AS | EZ | | D | LCC transport movable PG | LCC搬送可動PG | | |
| 13 | NSFTZ2932FCZZ | | BQ | LP | | C | PS front roller 1 follower shaft | PS前ﾛｰﾗｰ1従動軸 | | |
| 14 | PGiDM2628FCZZ | | AZ | FQ | | D | LCC transport PG | LCC搬送PG | | |
| | PGiDM2628FCZ1 | 1 | AZ | FQ | N | D | LCC transport PG | LCC搬送PG | | Mar/13 R/C |
| 15 | LPiNS0337FCZZ | | AB | DD | | C | Pin(ϕ3-12) | 平行ﾋﾟﾝ | | |
| 16 | PCLR-0539FCZZ | | AR | EQ | | C | Gear collar(ϕ22.2) | ｷﾞﾔｶﾗｰ | | |
| 17 | NBRGY0466FCZ1 | | AK | DX | | C | Bearing(ϕ8-16) | 軸受 | | |
| 18 | LPiNS0265FCZZ | | AB | DJ | | C | Spring pin(ϕ3-12) | ｽﾌﾟﾘﾝｸﾞﾋﾟﾝ | | |
| 19 | LPLTM6864FCZZ | | AC | DJ | | C | Bearing fixing plate | ﾍﾞｱﾘﾝｸﾞ取付板 | | |
| 20 | NGERH1609FCZZ | | AC | DJ | | C | Gear(18T) | ｷﾞﾔ | | |
| 21 | NPLYZ0545FCZZ | | AC | DD | | C | LCC transport drive pulley | LCC搬送駆動ﾌﾟｰﾘｰ | | |
| 22 | NBLTH0592FCZZ | | AG | DX | | B | Belt(40S3M222) | ﾍﾞﾙﾄ | | |
| 23 | XRESP70-08000 | | AA | DD | | C | E ring(E7) | Eﾘﾝｸﾞ | | |
| 24 | NGERH1744FCZZ | | AR | EQ | | C | Gear(20T) | ｷﾞﾔ | | |
| 25 | PCLR-0538FCZZ | | AR | EQ | | C | Gear collar(ϕ24.2) | ｷﾞﾔｶﾗｰ | | |
| 26 | GCAB-1427FCZ1 | | AN | EQ | | D | LCC lower cabinet | LCC下ｷｬﾋﾞ | | 1st lot |
| 27 | NROLR1954FCZZ | | AT | EZ | | C | LCC transport roller right | LCC搬送ﾛｰﾗｰ右 | | |
| 28 | NROLR1955FCZZ | | AT | EZ | | C | LCC transport roller middle | LCC搬送ﾛｰﾗｰ中 | | |
| 29 | NROLR1953FCZZ | | AS | EZ | | C | LCC transport roller left | LCC搬送ﾛｰﾗｰ左 | | |
| 30 | CFRM-1554FC01 | | AH | DX | | C | LCC transport frame | LCC搬送ﾌﾚｰﾑ | | |
| 31 | MSPRD4292FCZZ | | AE | DJ | | C | LCC transport earth | LCC搬送ｱｰｽ | | |
| 32 | QEARP0158FCZZ | | AB | DJ | | C | Interface pass earth plate | 中継ﾊﾟｽｱｰｽ板 | | |
| 33 | NBRGY0730FCZ1 | | AP | EQ | | C | Bearing(ϕ8-12) | 軸受 | | |
| 34 | LX-WZ0320FCZZ | | AB | DD | | C | Poly slider(M7) | ﾎﾟﾘｽﾗｲﾀﾞｰ | | |
| 35 | NGERH1790FCZZ | | AR | EQ | | C | Gear(22T) | ｷﾞﾔ | | |
| 36 | XHBS730P08000 | | AB | DD | | C | Screw(3×8) | ﾋﾞｽ | | |
| 37 | MARMP0493FCZZ | | AF | DS | | C | drive joint arm | 駆動連結ｱｰﾑ | | |
| 38 | NGERH1726FCZZ | | AQ | EQ | | C | ADU joint gear(28T) | ADU連結ｷﾞﾔ | | |
| 39 | NGERH1791FCZZ | | AS | EQ | | C | MF gear(24T) | MFｷﾞﾔ | | |
| 40 | NSFTZ2948FCZZ | | AF | DS | | C | Movable joint shaft | 可動連結軸 | | |
| 41 | MSPRD4293FCZZ | | AD | DJ | | C | Drive joint spring | 駆動連結ｽﾌﾟﾘﾝｸﾞ | | |
| 42 | XRESP50-06000 | | AA | DD | | C | E ring(E5) | Eﾘﾝｸﾞ | | |
| 43 | XHBS740P08000 | | AA | DD | | C | Screw(4×8) | ﾋﾞｽ | | |
| 44 | XEBS740P08000 | | AA | DD | | C | Screw(4×8) | ﾋﾞｽ | | |
| 45 | XHBS730P06000 | | AC | DD | | C | Screw(3×6) | ﾋﾞｽ | | |
| 46 | XRESP40-06000 | | AA | DD | | C | E ring(E4) | Eﾘﾝｸﾞ | | |
| 501 | CGiDM2627DS51 | | AZ | FX | | E | Movable paper guide unit | 可動ﾍﾟｰﾊﾟｰｶﾞｲﾄﾞﾕﾆｯﾄ | | |
| | (Unit) | | | | | | | | | |
| 901 | CGiDM2628DS51 | | BM | HR | | E | LCC transport unit | LCC搬送ﾕﾆｯﾄ | | |

## 35 LCC 搬送ユニット (LCC transport unit)

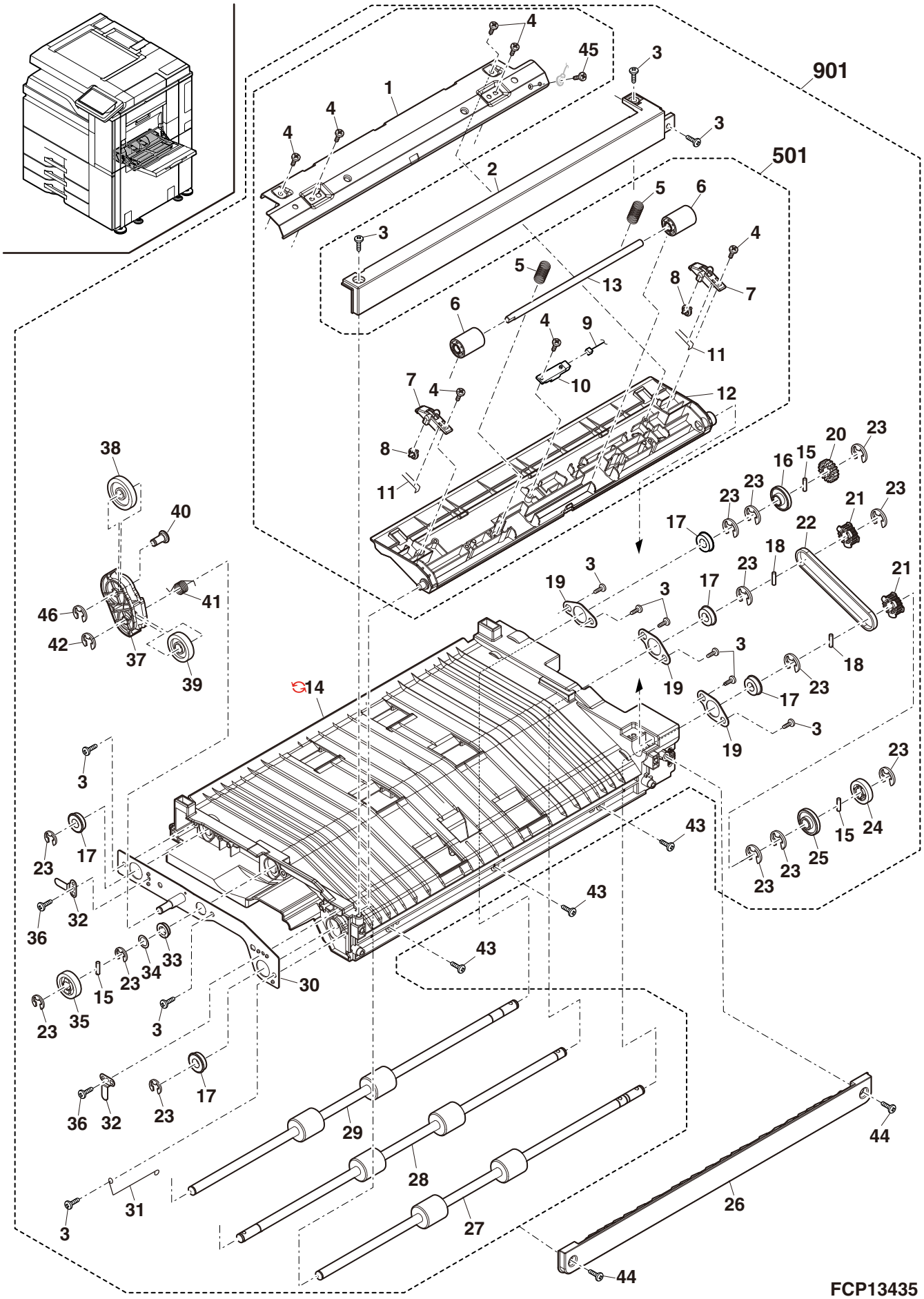

## 36 PS 下ユニット (PS lower unit)

| NO. | PARTS CODE | PRICE RANK | | NEW MARK | PART RANK | DESCRIPTION | |
|---|---|---|---|---|---|---|---|
| | | Ex. | Ja. | | | | |
| 1 | NROLR1986FCZZ | AS | EZ | N | C | PS lower transport roller | PS 下搬送ﾛｰﾗｰ |
| 2 | PGiDH2623FCZZ | AN | EG | N | C | PS lower PG upper | PS 下 PG 上 |
| 3 | XRESP70-08000 | AA | DD | | C | E ring(E7) | E ﾘﾝｸﾞ |
| 4 | NGERH1609FCZZ | AC | DJ | | C | Gear(18T) | ｷﾞﾔ |
| 5 | PCLR-0539FCZZ | AR | EQ | | C | Gear collar(φ22.2) | ｷﾞﾔｶﾗｰ |
| 6 | NBRGY0466FCZ1 | AK | DX | | C | Bearing(φ8-16) | 軸受 |
| 7 | XHBS740P08000 | AA | DD | | C | Screw(4×8) | ﾋﾞｽ |
| 9 | XHBS730P06000 | AC | DD | | C | Screw(3×6) | ﾋﾞｽ |
| 10 | LHLDZ1469FCZZ | AE | DJ | | C | Upper transport fulcrum holder | 上搬送支点ﾎﾙﾀﾞｰ |
| 11 | QEARP0173FCZZ | AC | DJ | | C | Open/close PG earth plate | 開閉 PG ｱｰｽ板 |
| 12 | LPLTM8338FCZZ | AS | EZ | N | C | PS lower PG reinforce plate | PS 下 PG 補強板 |
| 13 | QEARP0201FCZZ | AC | DJ | | C | Roller earth plate | ﾛｰﾗｰｱｰｽ板 |
| 14 | LPLTM8533FCZZ | AK | EB | N | C | PS lower transport PG reinforce plate | PS 下搬送 PG 補強板 |
| 15 | PGiDM2624FCZZ | AS | EQ | N | C | PS lower movable PG | PS 下可動 PG |
| 16 | NROLP1468FCZZ | AE | DJ | | C | Transport follower roller | 搬送従動ﾛｰﾗｰ |
| 17 | NSFTZ2932FCZZ | BQ | LP | | C | PS front roller 1 follower shaft | PS 前ﾛｰﾗｰ 1 従動軸 |
| 19 | PSHEP5544FCZZ | AD | DJ | | C | PS lower transport mylar | PS 下搬送ﾏｲﾗｰ |
| 20 | PGiDH2697FCZZ | AP | EQ | N | C | PS lower movable PG upper | PS 下可動 PG 上 |
| 21 | LPiNS0337FCZZ | AB | DJ | | C | Pin(φ3-12) | 平行ﾋﾟﾝ |
| 22 | MSPRC3542FCZZ | AC | DJ | | C | PS lower follower spring | PS 下従動ｽﾌﾟﾘﾝｸﾞ |
| 23 | XEBS740P08000 | AA | DD | | C | Screw(4×8) | ﾋﾞｽ |
| | (Unit) | | | | | | |
| 901 | CGiDH2623DS51 | BD | GN | N | E | PS lower PG | PS 下 PG |

## 36 PS 下ユニット (PS lower unit)

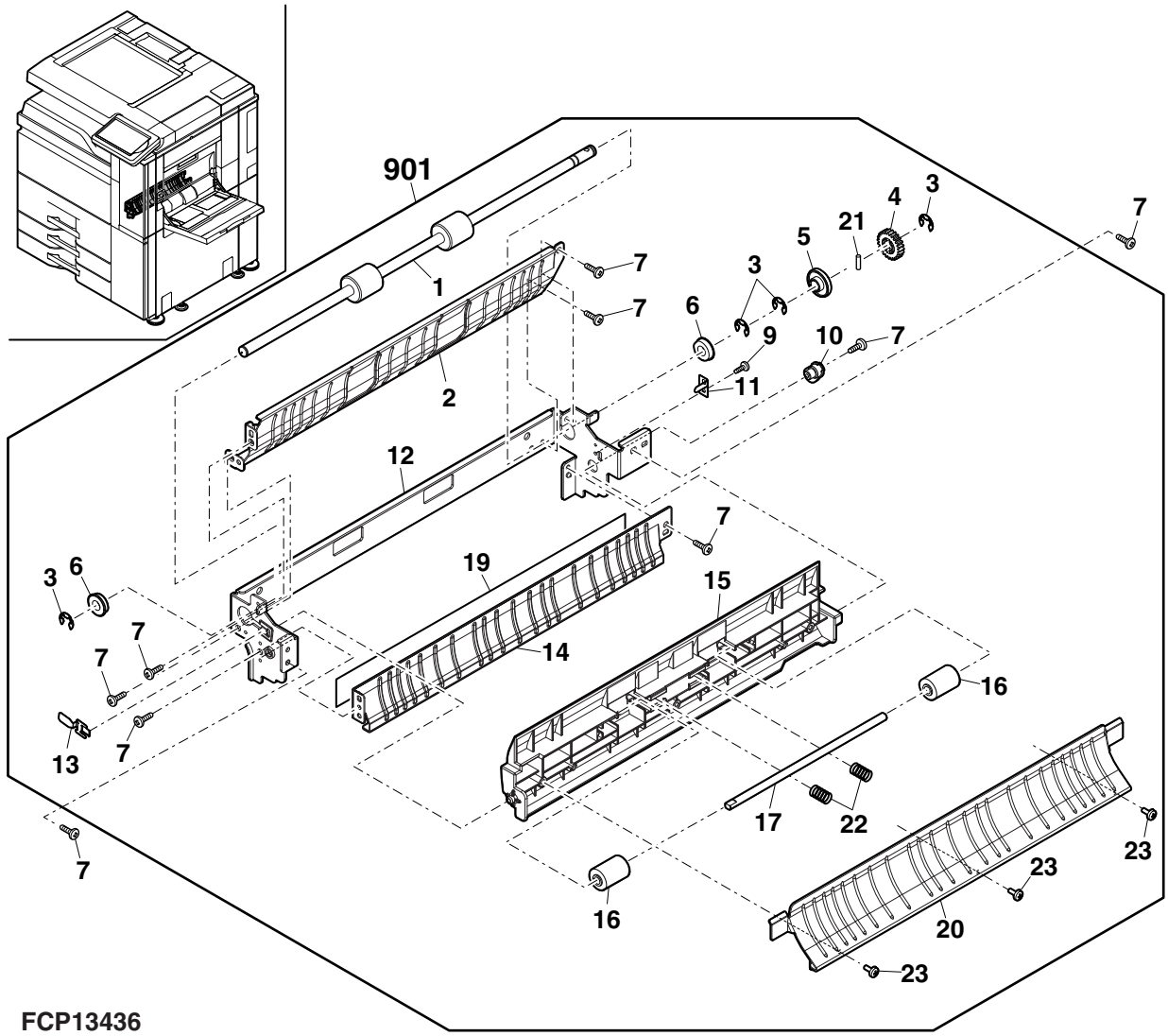


FCP13436

## 37 PS ユニット (PS unit)

| NO. | PARTS CODE | Inter-change | PRICE RANK Ex. | PRICE RANK Ja. | NEW MARK | PART RANK | DESCRIPTION | | TR No. | Effective time |
|---|---|---|---|---|---|---|---|---|---|---|
| 1 | NRÖLP1950FCZZ | | AZ | FQ | N | C | PS follower roller | PS 従動ﾛｰﾗｰ | | |
| 2 | XRESP70-08000 | | AA | DD | | C | E ring(E7) | E ﾘﾝｸﾞ | | |
| 3 | NBRGY0730FCZ1 | | AP | EQ | | C | Bearing(ϕ8-12) | 軸受 | | |
| 4 | LPLTM6863FCZZ | | AC | DJ | | C | PS follower bearing plate | PS 従動ﾍﾞｱﾘﾝｸﾞ板 | | |
| 5 | LX-WZ0454FCZZ | | AD | DD | | C | Poly slider(ϕ8-17) | ﾎﾟﾘｽﾗｲﾀﾞｰ | | |
| 6 | MSPRC3603FCZZ | | AC | DJ | | C | PS pressure spring | PS 加圧ｽﾌﾟﾘﾝｸﾞ | | |
| 7 | NRÖLR1952FCZZ | | BA | FX | N | C | PS roller | PS ﾛｰﾗｰ | | |
| 8 | LPiNS0155FCZZ | | AA | DD | | C | Pin(ϕ3-10) | 平行ﾋﾟﾝ | | |
| 9 | NGERH1474FCZZ | | AC | DD | | C | PS gear | PS ｷﾞﾔ | | |
| 10 | LPLTM8534FCZZ | | AC | DD | N | C | PS follower bearing plate | PS 従動ﾍﾞｱﾘﾝｸﾞ板 | | |
| 11 | NGERH1609FCZZ | | AC | DJ | | C | Gear(18T) | ｷﾞﾔ | | |
| 12 | LPiNS0337FCZZ | | AB | DJ | | C | Pin(ϕ3-12) | 平行ﾋﾟﾝ | | |
| 13 | CCÖVP2469DS51 | | AR | EQ | N | E | Paper dust remove unit | 紙粉取りﾕﾆｯﾄ | | |
| 14 | CPLTM8392FC01 | | AK | DX | N | C | Motor fixing plate | ﾓｰﾀｰ取付板 | | |
| 15 | RMÖTS0922FCP1 | | BF | GN | | B | PS front motor | PS 前ﾓｰﾀｰ | | |
| 16 | RMÖTS0962FCPZ | | BG | GT | | B | PS motor | PS ﾓｰﾀｰ | | |
| 17 | LHLDZ2304FCZZ | | AH | DX | N | C | holder | PS ﾘｱﾙﾎﾙﾀﾞｰ | | |
| 18 | DHAi-5034FCPZ | | BR | MJ | N | C | PS UN motor harness | PS UNﾓｰﾀｰﾊｰﾈｽ | | |
| 19 | PSHEP6415FCZZ | | AC | DD | N | C | PS guide sheet F | PS ｶﾞｲﾄﾞｼｰﾄ F | | |
| 20 | XBPS740P10KS0 | | AC | DD | | C | Screw(4×10KS) | ﾋﾞｽ | | |
| 21 | XHBS730P06000 | | AC | DD | | C | Screw(3×6) [Japan( 日本 ),Americas,Europe] | ﾋﾞｽ | | |
| 22 | XHBS740P08000 | | AA | DD | | C | Screw(4×8) | ﾋﾞｽ | | |
| 23 | LSTYM0572FCZZ | | AK | DX | N | C | PS stay | PS ｽﾃｲ | | |
| 24 | XEBS740P10000 | | AA | DD | | C | Screw(4×10) | ﾋﾞｽ | | |
| 25 | VHPGP2A230L-1 | | AP | EQ | | B | Reflection sensor(GP2A230L) | 反射型ｾﾝｻｰ | | |
| 26 | LFiX-0648FCZZ | | AE | DJ | | C | PS guide fixer | PS ｶﾞｲﾄﾞ押え | | |
| 27 | XEBS730P08000 | | AC | DD | | C | Screw(3×8) | ﾋﾞｽ | | |
| 28 | LDAiU0865FCZZ | | AX | FG | N | C | PS base plate | PS 台板 | | |
| 29 | MSPRC3542FCZZ | | AC | DJ | | C | PS front follower spring | PS 前従動ｽﾌﾟﾘﾝｸﾞ | | |
| 30 | NRÖLP1468FCZZ | | AE | DJ | | C | Transport follower roller | 搬送従動ﾛｰﾗｰ | | |
| 31 | NSFTZ2932FCZZ | | BQ | LP | | C | PS front roller 1 follower shaft | PS 前ﾛｰﾗｰ 1 従動軸 | | |
| 32 | QEARP0201FCZZ | | AC | DJ | | C | Roller earth plate | ﾛｰﾗｰｱｰｽ板 | | |
| 33 | NBRGY0466FCZ1 | | AK | DX | | C | Bearing(ϕ8-16) | 軸受 | | |
| 34 | LPiNS0265FCZZ | | AB | DJ | | C | Spring pin(ϕ3-12) | ｽﾌﾟﾘﾝｸﾞﾋﾟﾝ | | |
| 35 | NGERH2247FCZZ | | AE | DJ | N | C | PS drive idle gear | PS 駆動ｱｲﾄﾞﾙｷﾞﾔ | | |
| 36 | NGERH2248FCZZ | | AU | EZ | N | C | Gear(44/49T) | ｷﾞﾔ | | |
| 37 | NGERH1667FCZZ | | AC | DJ | | C | Separate drive gear | 離接駆動ｷﾞﾔ | | |
| 38 | CPLTM8334FC01 | | AR | EQ | N | C | PS brake plate | PS ﾌﾞﾚｰｷﾌﾟﾚｰﾄ | | |
| 39 | NBLTH0485FCZ1 | | AG | FG | | B | Motor belt | ﾓｰﾀｰﾍﾞﾙﾄ | | |
| 40 | NPLYZ0483FCZZ | | AD | DJ | | C | 43 pulley | 43 ﾌﾟｰﾘｰ | | |
| 41 | NSFTZ3666FCZZ | | AF | DS | N | C | Front idle gear shaft | PS 前ｱｲﾄﾞﾙｷﾞﾔｼｬﾌﾄ | | |
| 42 | NGERH1734FCZZ | | AR | EQ | | C | Gear(32T) | ｷﾞﾔ | | |
| 43 | LHLDW1620FCZZ | | AC | DJ | | C | Edge holder(11U) | ｴｯｼﾞﾎﾙﾀﾞｰ | | |
| 44 | PGiDM2622FCZZ | | AP | EQ | N | C | PS upper PG | PS 上 PG | | |
| 45 | PSHEP6415FCZZ | | AC | DD | N | C | PS guide sheet F | PS ｶﾞｲﾄﾞｼｰﾄ F | | |
| 46 | LSTYM0260FCZZ | | AK | EB | | C | Reinforce stay | 補強ｽﾃｲ | | |
| 47 | NRÖLR1951FCZZ | | AU | FG | N | C | PS front roller | PS 前ﾛｰﾗｰ | | |
| 48 | LPLTM8521FCZZ | | AK | DX | N | C | PS stay | PS ｽﾃｲ | | |
| | ↻ LPLTM8521FCZ1 | 1 | AK | DX | N | C | PS stay | PS ｽﾃｲ | | Mar/13 |
| 49 | MSPRP3539FCZZ | | AD | DJ | | C | PS front earth spring [Japan( 日本 ),Americas,Europe] | PS 前ｱｰｽｽﾌﾟﾘﾝｸﾞ | | |
| 50 | CPLTM6856FC02 | | AE | DJ | | C | Joint plate | 連結ﾌﾟﾚｰﾄ | | |
| 51 | XRESP50-06000 | | AA | DD | | C | E ring(E5) | E ﾘﾝｸﾞ | | |
| 52 | NGERH1706FCZZ | | AP | EQ | | C | 1way gear(18T) | 1WAY ｷﾞﾔ | | |
| 53 | MARMM0492FCZZ | | AC | DD | N | C | Belt link arm | ﾍﾞﾙﾄﾘﾝｸｱｰﾑ | | |
| 54 | PSHEP5510FCZZ | | AB | DJ | | C | Flange mylar | ﾌﾗﾝｼﾞﾏｲﾗｰ | | |
| 55 | NBLTH0453FCZZ | | AQ | EQ | | B | MF pickup belt | MF ﾋﾟｯｸｱｯﾌﾟﾍﾞﾙﾄ | | |
| 56 | NGERH1743FCZZ | | AR | EQ | | C | Gear pulley(16T16P) | ｷﾞﾔﾌﾟｰﾘｰ | | |
| 57 | LPLTM8335FCZZ | | AH | DX | N | C | PS Side plate F | PS 側板 F | | |
| | ↻ LPLTM8335FCZ1 | 1 | AH | DX | N | C | PS Side plate F | PS 側板 F | | Mar/13 |
| 58 | CPLTM6859FC02 | | AF | DS | | C | PS slanting compensation plate | PS 斜め補正板 | | |
| 59 | LX-BZ0342FCPZ | | AB | DD | | C | Step screw | 段ﾋﾞｽ | | |
| 60 | PSHEP6501FCZZ | | AD | DJ | N | C | PS transfer front guide sheet R | PS 転写前ｶﾞｲﾄﾞｼｰﾄ R | | |
| 61 | PSHEP6500FCZZ | | AD | DJ | N | C | PS transfer front guide sheet F | PS 転写前ｶﾞｲﾄﾞｼｰﾄ F | | |
| 62 | DHAi-5031FCPZ | | AK | EB | N | C | PS harness | PS ﾊｰﾈｽ | | |
| 63 | PSHEP6512FCZZ | | AC | DD | N | C | PS guide mylar | PS ｶﾞｲﾄﾞﾏｲﾗｰ | | |
| 64 | XHBS730P05000 | | AA | DD | | C | Screw(3×5) | ﾋﾞｽ | | |
| 65 | QEARP0356FCZZ | | AC | DD | N | C | PS front follow earth plate | PS 前従動ｱｰｽ板 | | 1st lot |
| | | | | | | | | | | |
| | (Unit) | | | | | | | | | |
| 901 | CDAiU0865DS51 | | BW | RJ | N | E | PS unit | PS ﾕﾆｯﾄ | | |
| | | | | | | | | | | |

## 37 PS ユニット (PS unit)

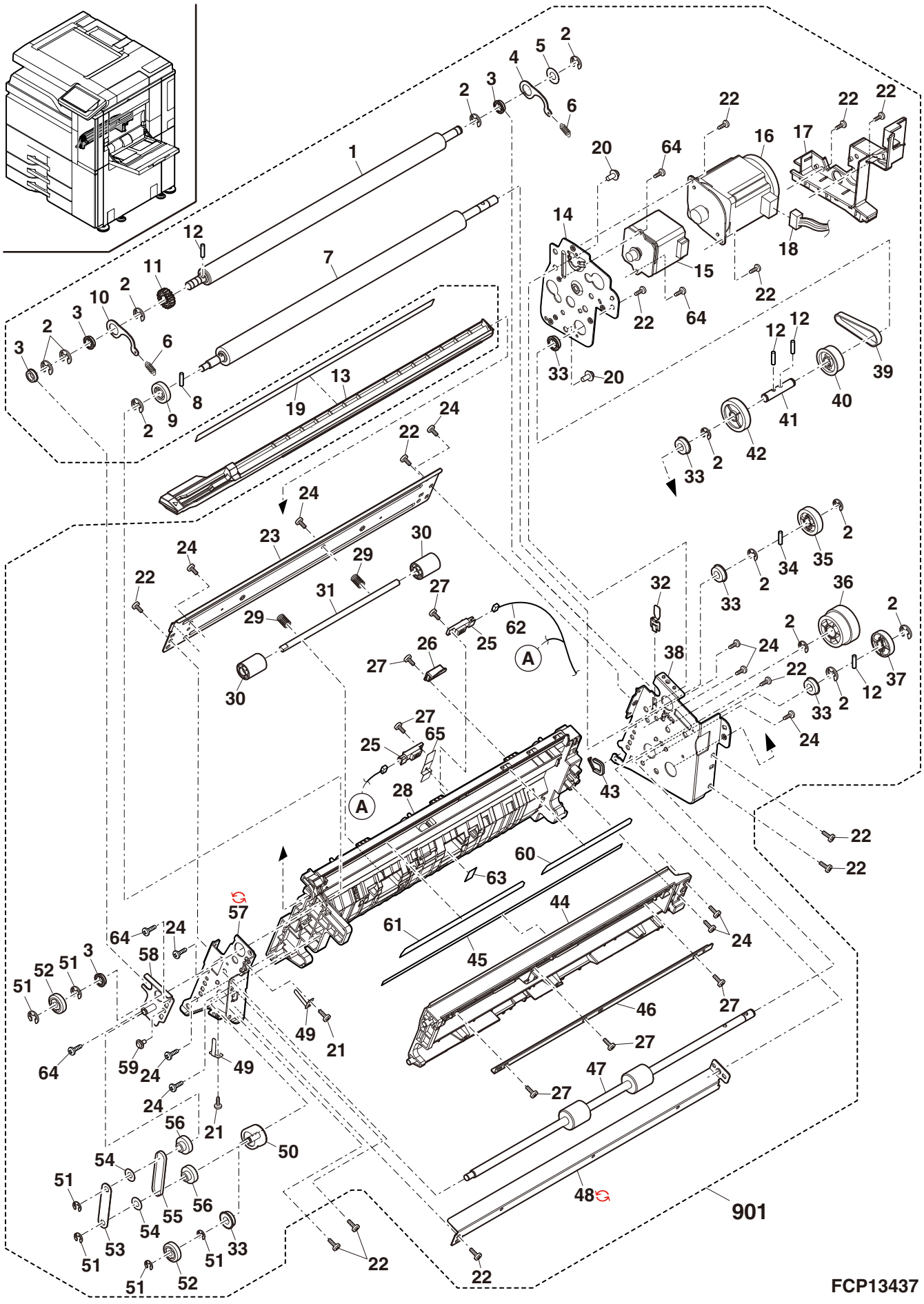

## 38 LSU 部 (LSU section)

| NO. | PARTS CODE | | PRICE RANK Ex. | PRICE RANK Ja. | NEW MARK | PART RANK | DESCRIPTION | | TR No. | Effective time |
|---|---|---|---|---|---|---|---|---|---|---|
| 1 | PSHT-0162FCZZ | | AG | DX | | C | LSU shutter | LSUｼｬｯﾀｰ | | |
| 2 | LFRM-1566FCZ1 | | AN | EG | N | C | Shutter frame | ｼｬｯﾀｰﾌﾚｰﾑ | | |
| | LFRM-1566FCZ2 | 3 | AN | EG | N | C | Shutter frame | ｼｬｯﾀｰﾌﾚｰﾑ | | May/12 R/C |
| 3 | NBRGP0753FCZ1 | | AB | DD | | C | Shutter bearing | ｼｬｯﾀｰ軸受 | | |
| 4 | MSPRD3394FCZZ | | AA | DJ | | C | Shutter spring | ｼｬｯﾀｰｽﾌﾟﾘﾝｸﾞ | | |
| 5 | XHBS730P08000 | | AB | DD | | C | Screw(3×8) | [Japan( 日本 )] ﾋﾞｽ | | |
| 6 | LX-BZ0736FCPZ | | AC | DD | | C | Step screw | 段ﾋﾞｽ | | |
| 7 | MARMP0495FCZZ | | AL | EB | | C | Lever link arm | ﾚﾊﾞｰﾘﾝｸｱｰﾑ | | |
| 8 | PGiDM2653FCZZ | | AK | DX | | C | DV guide | DVｶﾞｲﾄﾞ | | |
| | PGiDM2653FCZ1 | 1 | AK | DX | N | C | DV guide | DVｶﾞｲﾄﾞ | | May/12 R/C |
| 9 | LX-BZ0833FCPZ | | AC | DD | | C | Screw | ﾋﾞｽ | | |
| 10 | MLEVP1256FCZZ | | AD | DD | | C | Shutter lever | ｼｬｯﾀｰﾚﾊﾞｰ | | |
| 11 | MSPRT3869FCZZ | | AC | DJ | | C | Shutter lever spring | ｼｬｯﾀｰﾚﾊﾞｰｽﾌﾟﾘﾝｸﾞ | | |
| 12 | LPLTM8294FCZZ | | BA | FX | | C | Middle base plate | 中間ﾍﾞｰｽ板 | | |
| 13 | MSPRT3870FCZ1 | | AD | DJ | | C | Solenoid arm springSolenoid arm spring | ｿﾚﾉｲﾄﾞｱｰﾑｽﾌﾟﾘﾝｸﾞ | | |
| 14 | CPLTM8298FC01 | | AG | DX | | C | Shutter solenoid plate | ｼｬｯﾀｰｿﾚﾉｲﾄﾞ取付板 | | |
| 15 | MARMP0496FCZZ | | AD | DJ | | C | Shutter solenoid arm | ｼｬｯﾀｰｿﾚﾉｲﾄﾞｱｰﾑ | | |
| 16 | RPLU-0368FCZZ | | AT | EZ | | B | Solenoid CL | ｿﾚﾉｲﾄﾞCL | | |
| 17 | NSFTZ3656FCZZ | | AQ | EQ | | C | LSU shaft | LSUｼｬﾌﾄ | | |
| 18 | LSTYM0566FCZZ | | AW | FG | | C | Middle stay B | 中間ｽﾃｲB | | |
| 19 | LSTYM0565FCZZ | | AX | FG | | C | Middle stay A | 中間ｽﾃｲA | | |
| ⚠ 20 | RHETP0136FCPZ | | BB | GD | | B | LSU warm heater 100(14W) | [Japan( 日本 )] LSU保温ﾋｰﾀｰ100 | | |
| 21 | XBBS730P04000 | | AA | DD | | C | Screw(3×4)[Japan( 日本 )] | ﾋﾞｽ | | |
| 22 | LPLTM8274FCZZ | | AL | EB | | C | LSU heater plate[Japan( 日本 )] | LSUﾋｰﾀｰﾌﾟﾚｰﾄ | | |
| 24 | NFANP0081FCZZ | | BA | FX | | B | LSU cooling fan | LSU冷却ﾌｧﾝ | | |
| 25 | CPWBX2026DS51 | | BW | RR | | E | LSU control PWB | (Refer to Matrix) LSUｺﾝﾄﾛｰﾙ基板 | | |
| | CPWBX2026DS55 | | | | N | E | LSU control PWB | (Refer to Matrix) LSUｺﾝﾄﾛｰﾙ基板 | | 1st lot |
| 26 | RMOTP1022FCP2 | | BS | MW | N | B | Polygon motor VR | ﾎﾟﾘｺﾞﾝﾓｰﾀｰVR | | |
| 27 | DUNT-8750DSZZ | | CW | VZ | | E | LSU unit | (Refer to Matrix) LSU ﾕﾆｯﾄ | | |
| | DUNT-8750DS12 | 3 | | | N | E | LSU unit | (Refer to Matrix) LSUﾕﾆｯﾄ | | Mar/13 |
| | DUNT-8750DS13 | | | | N | E | LSU unit | (Refer to Matrix) LSUﾕﾆｯﾄ | | 1st lot |
| 28 | LPLTM8303FCZZ | | AM | EG | | C | LSU left plate | LSU左ﾌﾟﾚｰﾄ | | |
| 29 | XBBS730P04000 | | AA | DD | | C | Screw(3×4) | ﾋﾞｽ | | |
| 30 | XHBS740P08000 | | AA | DD | | C | Screw(4×8) | ﾋﾞｽ | | |
| 31 | XRESP80-08000 | | AA | DD | | C | E ring(E8) | Eﾘﾝｸﾞ | | |
| 32 | LSTPP0384FCZZ | | AB | DJ | | C | Stopper | ｽﾄｯﾊﾟｰ | | |
| 33 | DHAi-5069FCPZ | | BB | GD | | C | LSU DRV interface harness | LSU DRV中継ﾊｰﾈｽ | | |
| 34 | PSHEP6484FCZZ | | AG | DS | | C | Harness protect sheet A | ﾊｰﾈｽ保護ｼｰﾄA | | |
| 35 | TLABH5000FCZ1 | | AA | DJ | | C | Color label(Y) | ｶﾗｰﾗﾍﾞﾙ(Y) | | |
| 36 | TLABH4999FCZ1 | | AA | DJ | | C | Color label(M) | ｶﾗｰﾗﾍﾞﾙ(M) | | |
| 37 | TLABH4998FCZ1 | | AA | DJ | | C | Color label(C) | ｶﾗｰﾗﾍﾞﾙ(C) | | |
| 38 | TLABH4997FCZ1 | | AA | DJ | | C | Color label(BK) | ｶﾗｰﾗﾍﾞﾙ(BK) | | |
| 39 | CPWBF1674FC31 | | AL | EB | | E | LSU thermistor PWB | LSUｻｰﾐｽﾀｰ基板 | | |
| 40 | PSHEZ6601FCPZ | | | | N | C | LSU left plate right | [Taiwan] LSU左ﾌﾟﾚｰﾄ右 | | 1st lot |
| 41 | PSHEZ6602FCPZ | | | | N | C | LSU left plate left | [Taiwan] LSU左ﾌﾟﾚｰﾄ左 | | 1st lot |

# Matrix

| No.25 | LSU ｺﾝﾄﾛｰﾙ基板 (LSU control PWB) | | | | | | | | | | | | |
|---|---|---|---|---|---|---|---|---|---|---|---|---|---|
| PART CODE | MX-7040N MX-6240N | | MX-6540FN | | | | | | | | | | |
| | Americas, Europe, Australia, Asia, South Afrca | Taiwan | Japan（日本） | | | | | | | | | | |
| CPWBX2026DS51 | 1st lot | | 1st lot | | | | | | | | | | |
| CPWBX2026DS55 | | 1st lot | | | | | | | | | | | |

38 LSU 部 (LSU section)

## Matrix

| No.27 | LSU ユニット (LSU unit) | | | | | | | | | | | | |
|---|---|---|---|---|---|---|---|---|---|---|---|---|---|
| PART CODE | MX-7040N<br>MX-6240N | | MX-6540FN | | | | | | | | | | |
| | Americas,<br>Europe,<br>Australia,<br>Asia,<br>South Afrca | Taiwan | Japan（日本） | | | | | | | | | | |
| DUNT-8750DSZZ | 1st lot | | 1st lot | | | | | | | | | | |
| DUNT-8750DS12 | Mar/13 | | Mar/13 | | | | | | | | | | |
| DUNT-8750DS13 | | 1st lot | | | | | | | | | | | |

## 38 LSU 部 (LSU section)

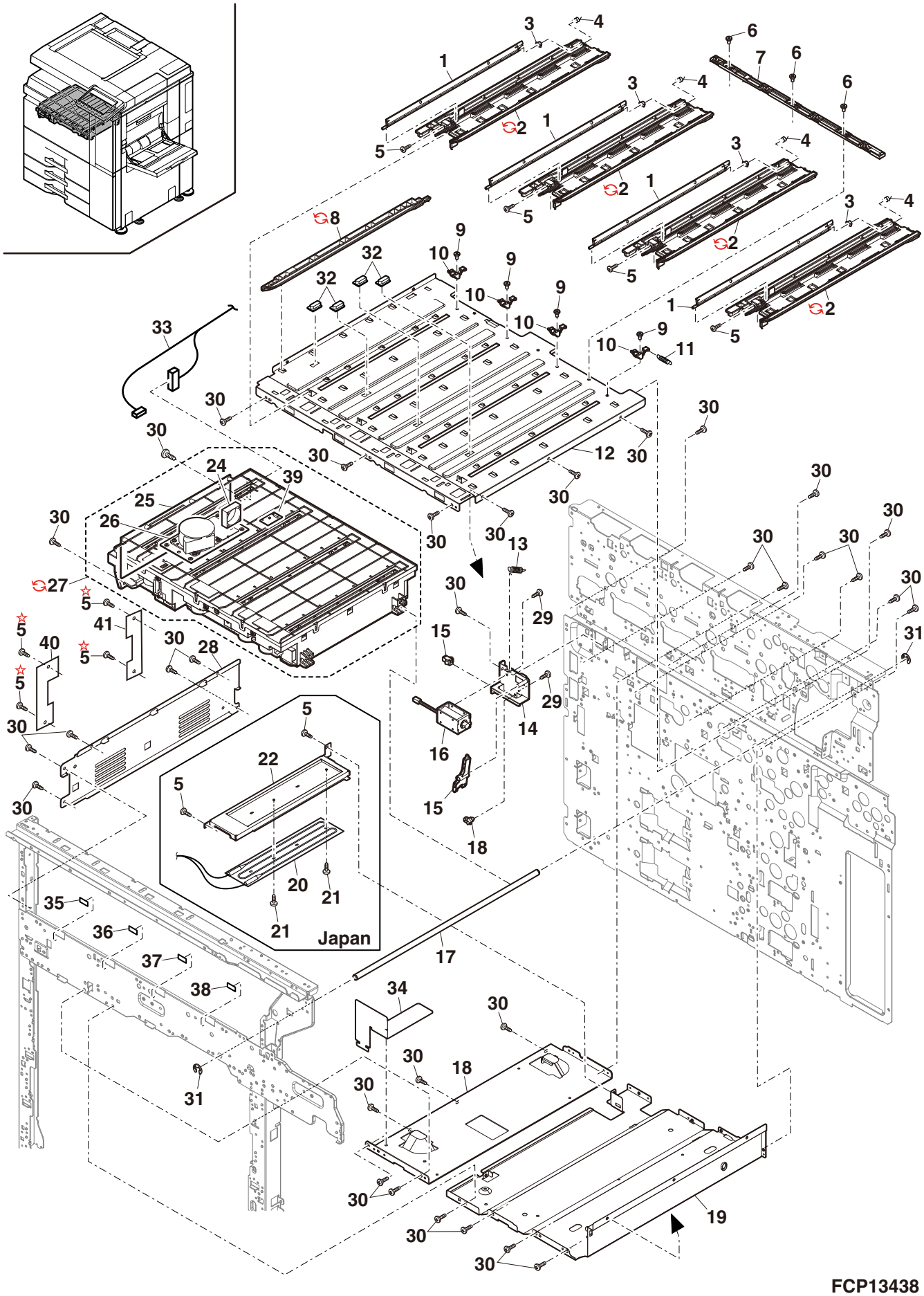

## 39 ﾄﾅｰ搬送部 1(Toner transport section 1)

| NO. | PARTS CODE | Inter-change | PRICE RANK Ex. | PRICE RANK Ja. | NEW MARK | PART RANK | DESCRIPTION | | TR No. | Effective time |
|---|---|---|---|---|---|---|---|---|---|---|
| 1 | PCOVP2442FCZZ | | AE | DS | N | C | TH shutter cover CMY | TH ｼｬｯﾀｰｶﾊﾞｰ CMY | | |
| 2 | PCOVP2439FCZZ | | AE | DS | N | C | TH shutter cover BK | TH ｼｬｯﾀｰｶﾊﾞｰ BK | | |
| 3 | PGiDM2651FCZZ | | AK | EB | N | C | TB guide CL | TB ｶﾞｲﾄﾞ CL | | |
| 4 | PMLT-1988FCZZ | | AC | DD | N | C | TH supply hole molt | TH 補給口ﾓﾙﾄ | | |
| 5 | XEBS730P05000 | | AA | DD | | C | Screw(3×5) | ﾋﾞｽ | | |
| 6 | PSEL-1152FCZZ | | AA | DD | N | D | Molt seal | ﾓﾙﾄｼｰﾙ | | |
| 7 | PMLT-1987FCZZ | | AD | DJ | N | C | Supply hole front molt | 補給口前ﾓﾙﾄ | | |
| 8 | MSPRC4269FCZZ | | AC | DD | N | C | TH shutter spring | TH ｼｬｯﾀｰ ｽﾌﾟﾘﾝｸﾞ | | |
| 9 | PSHT-0157FCZZ | | AC | DD | N | C | TH shutter | TH ｼｬｯﾀｰ | | |
| 10 | PCOVP2443FCZZ | | AN | EG | N | C | TH cover YM | TH ｶﾊﾞｰ YM | | |
| | PCOVP2443FCZ1 | 3 | AN | EG | N | C | TH cover YM | TH ｶﾊﾞｰ YM | | 12/Apr |
| 11 | PCOVP2438FCZZ | | AN | EG | N | C | TH cover BK | TH ｶﾊﾞｰ BK | | |
| | PCOVP2438FCZ1 | 3 | AN | EG | N | C | TH cover BK | TH ｶﾊﾞｰ BK | | 12/Apr |
| 12 | XEBS730P08000 | | AC | DD | | C | Screw(3×8) | ﾋﾞｽ | | |
| 13 | PMLT-2071FCZZ | | AP | EQ | N | C | TH cover molt LR | TH ｶﾊﾞｰﾓﾙﾄ LR | | |
| 14 | PMLT-1989FCZZ | | AD | DJ | N | C | TH cover molt F | TH ｶﾊﾞｰﾓﾙﾄ F | | |
| 15 | PCOVP2441FCZZ | | AM | EG | N | C | TH cover C | TH ｶﾊﾞｰ C | | |
| | PCOVP2441FCZ1 | 3 | AM | EG | N | C | TH cover C | TH ｶﾊﾞｰ C | | 12/Apr |
| 16 | PGiDM2650FCZZ | | AK | EB | N | C | TB guide K | TB ｶﾞｲﾄﾞ K | | |
| 17 | NFANP0112FCPZ | | AZ | FQ | | B | TN cooling fan 3 | TN 冷却ﾌｧﾝ 3 | | |
| 18 | LHLDW2328FCPZ | | AC | DD | | C | Edge saddle(EWSE-8.1-01) | ｴｯｼﾞｻﾄﾞﾙ | | |
| 19 | XHBS740P10000 | | AA | DD | | C | Screw(4×10) | ﾋﾞｽ | | |
| 20 | LPLTM8402FCZZ | | BA | FX | N | C | TH fixing plate | TH 取付板 | | |
| 21 | LHLDW1970FCPZ | | AH | DX | | C | Saddle(RMS-3V0) | ｻﾄﾞﾙ | | |
| 22 | LHLDW7011XCZZ | | AB | DD | | C | Wire suddle(YMC-05-0) | ﾜｲﾔｰｻﾄﾞﾙ | | |
| 23 | PGiDM2654FCZZ | | AL | EB | N | C | TB guide POY | TB ｶﾞｲﾄﾞ POY | | |
| 24 | PCOVP2452FCZ1 | | AS | EZ | N | C | Front frame bottle cover | 前ﾌﾚｰﾑﾎﾞﾄﾙｶﾊﾞｰ | | |
| 25 | VHPSG2A141+-1 | | AF | DS | | B | Photo sensor(SG2A141) | ﾌｫﾄｾﾝｻｰ | | |
| 26 | XHBS730P20000 | | AB | DD | | C | Screw(3×20) | ﾋﾞｽ | | |
| 27 | TLABH5030FCZZ | | AB | DJ | | D | Color label Y | ｶﾗｰﾗﾍﾞﾙ Y | | |
| 28 | TLABH5029FCZZ | | AA | DJ | | D | Color label M | ｶﾗｰﾗﾍﾞﾙ M | | |
| 29 | TLABH5028FCZZ | | AA | DJ | | D | Color label C | ｶﾗｰﾗﾍﾞﾙ C | | |
| 30 | TLABH5027FCZZ | | AA | DJ | | D | Color label BK | ｶﾗｰﾗﾍﾞﾙ BK | | |
| 31 | XHBS740P08000 | | AA | DD | | C | Screw(4×8) | ﾋﾞｽ | | |
| 32 | LHLDW2037FCPZ | | AC | DJ | | C | Clamp(RMS-1V0) | ｸﾗﾝﾌﾟ | | |
| 501 | DUNT-8728DS13 | | BF | GN | N | E | Toner hopper unit Y | ﾄﾅｰﾎｯﾊﾟｰﾕﾆｯﾄ Y | | |
| 502 | DUNT-8728DS12 | | BF | GN | N | E | Toner hopper unit M | ﾄﾅｰﾎｯﾊﾟｰﾕﾆｯﾄ M | | |
| 503 | DUNT-8728DS11 | | BF | GN | N | E | Toner hopper unit C | ﾄﾅｰﾎｯﾊﾟｰﾕﾆｯﾄ C | | |
| 504 | DUNT-8728DSZZ | | BF | GN | N | E | Toner hopper unit BK | ﾄﾅｰﾎｯﾊﾟｰﾕﾆｯﾄ B | | |

# 39 ﾄﾅｰ搬送部 1(Toner transport section 1)

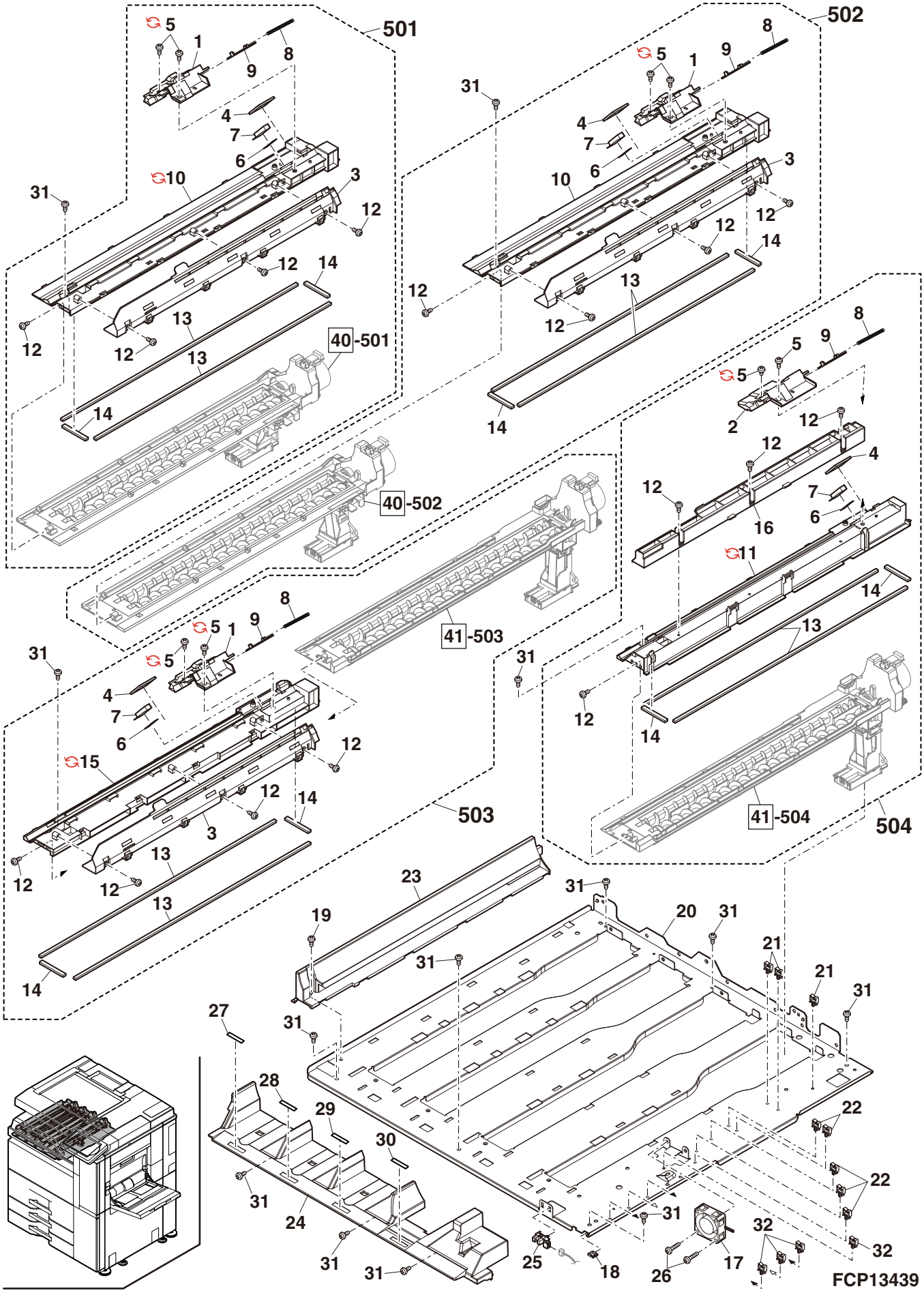

## 40 ﾄﾅｰ搬送部 2(Toner transport section 2)

| NO. | PARTS CODE | Inter-change | PRICE RANK Ex. | PRICE RANK Ja. | NEW MARK | PART RANK | DESCRIPTION | | TR No. | Effective time |
|---|---|---|---|---|---|---|---|---|---|---|
| 1 | NSRW-0087FCZZ | | AL | EB | | C | TH screw A YM | THｽｸﾘｭｰA YM | | |
| 2 | NSRW-0088FCZZ | | AL | EB | | C | TH screw B YM | THｽｸﾘｭｰB YM | | |
| 3 | PSHEP6400FCZZ | | AC | DD | | C | Sensor wiper sheet | ｾﾝｻｰﾜｲﾊﾟｰｼｰﾄ | | |
| 4 | QEARB0344FCZZ | | AC | DD | | C | THM earth spring | THMｱｰｽｽﾌﾟﾘﾝｸﾞ | | |
| 5 | NGERH2271FCZZ | | AC | DD | | C | TH idle gear | THｱｲﾄﾞﾙｷﾞﾔ | | |
| 6 | NGERH2272FCZZ | | AC | DD | | C | TH drive gear A | TH駆動ｷﾞﾔA | | |
| 7 | XRESP30-06000 | | AA | DD | | C | E ring(E3) | Eﾘﾝｸﾞ | | |
| 8 | CPLTM8268FC01 | | AM | EG | | C | TH drive plate YM | TH駆動板金YM | | |
| 9 | XBBS730P06000 | | AC | DD | | C | Screw(3×6) | ﾋﾞｽ | | |
| 10 | NGERH2270FCZZ | | AC | DD | | C | THSC gear | THSCｷﾞﾔ | | |
| 11 | PSEL-1169FCZZ | | AC | DD | | D | TH bearing seal | TH軸受ｼｰﾙ | | |
| 12 | PBOX-0205FCZZ | | AP | EQ | | C | TH box YM | THﾎﾞｯｸｽYM | | |
| 13 | RDTCP0196FCZZ | | AZ | FQ | | B | Remain sensor B | 残量ｾﾝｻｰB | | |
| 14 | XEBS730P08000 | | AC | DD | | C | Screw(3×8) | ﾋﾞｽ | | |
| 15 | QEARP0346FCZZ | | AC | DD | | C | TH sensor earth BKC | THｾﾝｻｰｱｰｽBKC | | |
| 16 | PMLT-1992FCZ1 | | AC | DD | N | C | Pipe molt upper | ﾊﾟｲﾌﾟﾓﾙﾄ上 | | 1st lot |
| 17 | PPiPP0263FCZZ | | AE | DS | | C | Toner pipe(Refer to Matrix) | ﾄﾅｰﾊﾟｲﾌﾟ | | |
| | PPiPP0264FCZZ | | AE | DS | | C | Toner pipe(Refer to Matrix) | ﾄﾅｰﾊﾟｲﾌﾟ | | |
| | PPiPP0264FCZ1 | 1 | AE | DS | N | C | Toner pipe(Refer to Matrix) | ﾄﾅｰﾊﾟｲﾌﾟ | | 12/Sep R/C |
| 18 | PMLT-1993FCZZ | | AC | DD | | C | Pipe molt lower | ﾊﾟｲﾌﾟﾓﾙﾄ下 | | |
| 19 | MSPRC4272FCZZ | | AC | DD | | C | Pipe spring | ﾊﾟｲﾌﾟｽﾌﾟﾘﾝｸﾞ | | |
| 20 | LHLDZ2260FCZZ | | AF | DS | | C | Toner pipe holder(Refer to Matrix) | ﾄﾅｰﾊﾟｲﾌﾟﾎﾙﾀﾞｰ | | |
| | LHLDZ2261FCZZ | | AF | DS | | C | Toner pipe holder(Refer to Matrix) | ﾄﾅｰﾊﾟｲﾌﾟﾎﾙﾀﾞｰ | | |
| 21 | PSEL-1148FCZZ | | AC | DD | | D | Pipe holder seal | ﾊﾟｲﾌﾟﾎﾙﾀﾞｰｼｰﾙ | | |
| 22 | PSHT-0158FCZZ | | AC | DD | | C | Toner shutter | ﾄﾅｰｼｬｯﾀｰ | | |
| 23 | PSEL-1147FCZZ | | AD | DJ | | D | Pipe shutter seal | ﾊﾟｲﾌﾟｼｬｯﾀｰｼｰﾙ | | |
| 24 | PCOVP2440FCZZ | | AD | DJ | | C | Toner shutter cover | ﾄﾅｰｼｬｯﾀｰｶﾊﾞｰ | | |
| 25 | MSPRC4271FCZZ | | AC | DD | | C | Pipe shutter spring | ﾊﾟｲﾌﾟｼｬｯﾀｰｽﾌﾟﾘﾝｸﾞ | | |
| 26 | DHAi-5040FCPZ | | BR | LX | | C | TFSD harness | TFSDﾊｰﾈｽ | | |
| 27 | RMOTS1028FCPZ | | BN | LE | | B | Toner motor | ﾄﾅｰﾓｰﾀｰ | | |
| 28 | XHBS740P08000 | | AA | DD | | C | Screw(4×8) | ﾋﾞｽ | | |
| 501 | CBOX-0205DS51 | | BC | GD | | E | TH box unit YM | THﾎﾞｯｸｽﾕﾆｯﾄ YM | | |
| 502 | CPiPP0263DS51 | | AQ | EQ | | E | TH pipe unit(Refer to Matrix) | THﾊﾟｲﾌﾟﾕﾆｯﾄ | | |
| | CPiPP0264DS51 | | AQ | EQ | | E | TH pipe unit(Refer to Matrix) | THﾊﾟｲﾌﾟﾕﾆｯﾄ | | |

# Matrix

| No.17 | ﾄﾅｰﾊﾟｲﾌﾟ (Toner pipe) | | | | | | | | | | | | | | | |
|---|---|---|---|---|---|---|---|---|---|---|---|---|---|---|---|---|
| PARTS CODE | Magenta | Yellow | | | | | | | | | | | | | | |
| PPiPP0263FCZZ | 1st lot | | | | | | | | | | | | | | | |
| PPiPP0264FCZZ | | 1st lot | | | | | | | | | | | | | | |
| PPiPP0264FCZ1 | | 12/sep R/C | | | | | | | | | | | | | | |

| No.20 | ﾄﾅｰﾊﾟｲﾌﾟﾎﾙﾀﾞｰ (Toner pipe holder) | | | | | | | | | | | | | | | |
|---|---|---|---|---|---|---|---|---|---|---|---|---|---|---|---|---|
| PARTS CODE | Magenta | Yellow | | | | | | | | | | | | | | |
| LHLDZ2260FCZZ | 1st lot | | | | | | | | | | | | | | | |
| LHLDZ2261FCZZ | | 1st lot | | | | | | | | | | | | | | |

| No.502 | TH ﾊﾟｲﾌﾟﾕﾆｯﾄ (TH pipe unit) | | | | | | | | | | | | | | | |
|---|---|---|---|---|---|---|---|---|---|---|---|---|---|---|---|---|
| PARTS CODE | Magenta | Yellow | | | | | | | | | | | | | | |
| CPiPP0263DS51 | 1st lot | | | | | | | | | | | | | | | |
| CPiPP0264DS51 | | 1st lot | | | | | | | | | | | | | | |

## 40 ﾄﾅｰ搬送部 2(Toner transport section 2)

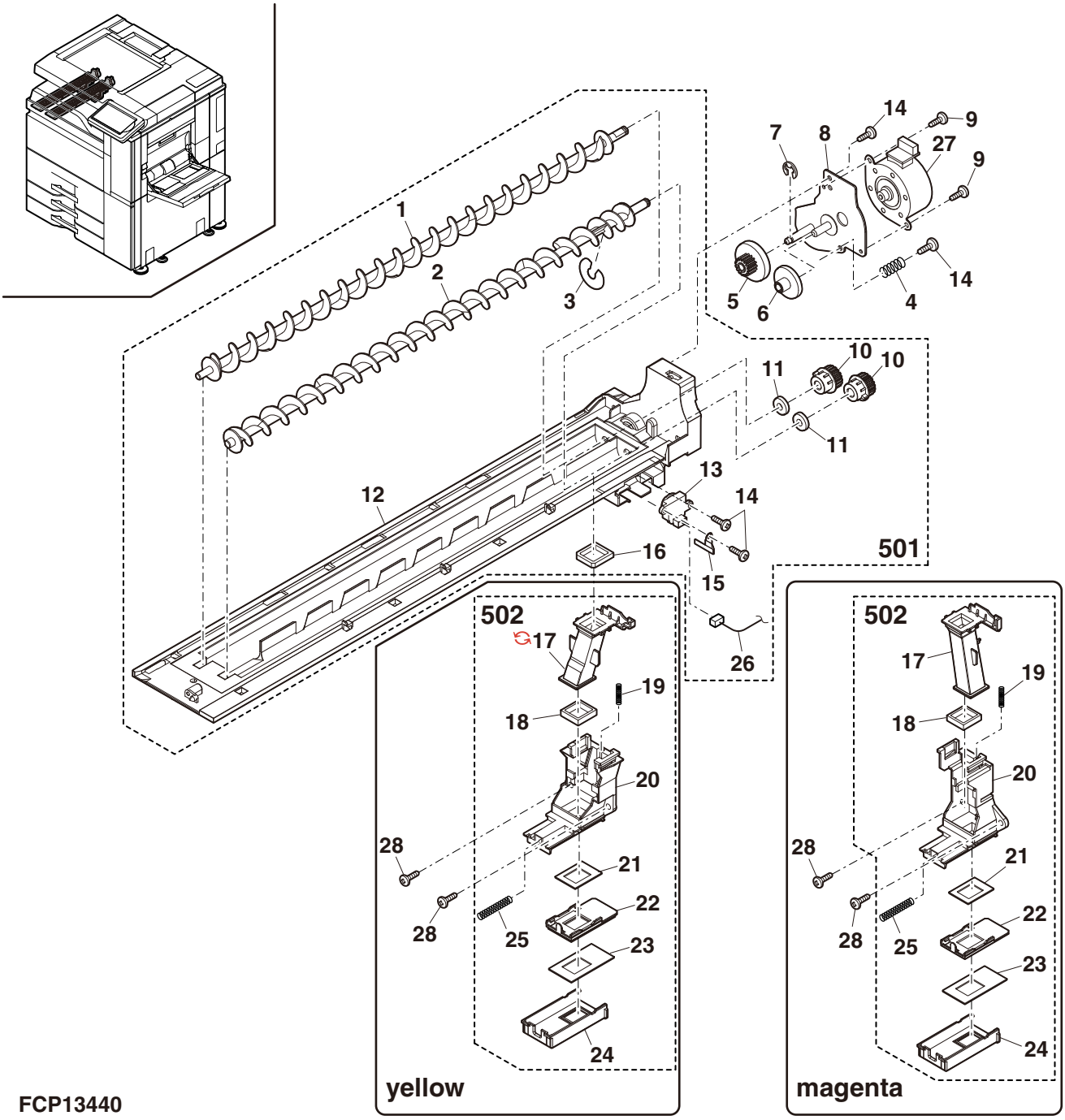


FCP13440

## 41 ﾄﾅｰ搬送部 3(Toner transport section 3)

| NO. | PARTS CODE | Inter-change | PRICE RANK Ex. | PRICE RANK Ja. | NEW MARK | PART RANK | DESCRIPTION | | TR No. | Effective time |
|---|---|---|---|---|---|---|---|---|---|---|
| 1 | NSRW-0085FCZZ | | AL | EB | | C | TH screw A BKC | THｽｸﾘｭｰA BKC | | |
| 2 | NSRW-0086FCZZ | | AL | EB | | C | TH screw B BKC | THｽｸﾘｭｰB BKC | | |
| 3 | PSHEP6400FCZZ | | AC | DD | | C | Sensor wiper sheet | ｾﾝｻｰﾜｲﾊﾟｰｼｰﾄ | | |
| 4 | QEARB0344FCZZ | | AC | DD | | C | THM earth spring | THMｱｰｽｽﾌﾟﾘﾝｸﾞ | | |
| 5 | NGERH2271FCZZ | | AC | DD | | C | TH idle gear | THｱｲﾄﾞﾙｷﾞﾔ | | |
| 6 | XRESP30-06000 | | AA | DD | | C | E ring(E3) | Eﾘﾝｸﾞ | | |
| 7 | NGERH2272FCZZ | | AC | DD | | C | TH drive gear A | TH駆動ｷﾞﾔA | | |
| 8 | CPLTM8267FC01 | | AM | EG | | C | TH drive plate BKC | TH駆動板金BKC | | |
| 9 | XBBS730P06000 | | AC | DD | | C | Screw(3×6) | ﾋﾞｽ | | |
| 10 | NGERH2270FCZZ | | AC | DD | | C | THSC gear | THSCｷﾞﾔ | | |
| 11 | PSEL-1169FCZZ | | AC | DD | | D | TH bearing seal | TH軸受ｼｰﾙ | | |
| 12 | RDTCP0196FCZZ | | AZ | FQ | | B | Remain sensor B | 残量ｾﾝｻｰB | | |
| 13 | QEARP0346FCZZ | | AC | DD | | C | TH sensor earth BKC | THｾﾝｻｰｱｰｽBKC | | |
| 14 | XEBS730P08000 | | AC | DD | | C | Screw(3×8) | ﾋﾞｽ | | |
| 15 | DHAi-5040FCPZ | | BR | LX | | C | TFSD harness | TFSDﾊｰﾈｽ | | |
| 16 | PMLT-1992FCZ1 | | AC | DD | N | C | Pipe molt upper | ﾊﾟｲﾌﾟﾓﾙﾄ上 | | 1st lot |
| 17 | PPiPP0261FCZZ | | AE | DJ | | C | Toner pipe(Refer to Matrix) | ﾄﾅｰﾊﾟｲﾌﾟ | | |
| | PPiPP0262FCZZ | | AE | DS | | C | Toner pipe(Refer to Matrix) | ﾄﾅｰﾊﾟｲﾌﾟ | | |
| 18 | MSPRC4272FCZZ | | AC | DD | | C | Pipe spring | ﾊﾟｲﾌﾟｽﾌﾟﾘﾝｸﾞ | | |
| 19 | PMLT-1993FCZZ | | AC | DD | | C | Pipe molt lower | ﾊﾟｲﾌﾟﾓﾙﾄ下 | | |
| 20 | LHLDZ2258FCZZ | | AF | DS | | C | Toner pipe holder BK | ﾄﾅｰﾊﾟｲﾌﾟﾎﾙﾀﾞｰBK | | |
| 21 | XHBS740P08000 | | AA | DD | | C | Screw(4×8) | ﾋﾞｽ | | |
| 22 | MSPRC4271FCZZ | | AC | DD | | C | Pipe shutter spring | ﾊﾟｲﾌﾟｼｬｯﾀｰｽﾌﾟﾘﾝｸﾞ | | |
| 23 | PSEL-1148FCZZ | | AC | DD | | D | Pipe holder seal | ﾊﾟｲﾌﾟﾎﾙﾀﾞｰｼｰﾙ | | |
| 24 | PSHT-0158FCZZ | | AC | DD | | C | Toner shutter | ﾄﾅｰｼｬｯﾀｰ | | |
| 25 | PSEL-1147FCZZ | | AD | DJ | | D | Pipe shutter seal | ﾊﾟｲﾌﾟｼｬｯﾀｰｼｰﾙ | | |
| 26 | PCOVP2440FCZZ | | AD | DJ | | C | Toner shutter cover | ﾄﾅｰｼｬｯﾀｰｶﾊﾞｰ | | |
| 27 | PBOX-0204FCZZ | | AP | EQ | | C | TH box BKC | THﾎﾞｯｸｽBKC | | |
| 28 | RMOTS1028FCPZ | | BN | LE | | B | Toner motor | ﾄﾅｰﾓｰﾀｰ | | |
| 501 | CBOX-0204DS51 | | BC | GD | | E | TH box unit BKC | THﾎﾞｯｸｽﾕﾆｯﾄ BKC | | |
| 502 | CPiPP0261DS51 | | AP | EQ | | E | TH pipe unit(Refer to Matrix) | THﾊﾟｲﾌﾟﾕﾆｯﾄ | | |
| | CPiPP0262DS51 | | AP | EQ | | E | TH pipe unit(Refer to Matrix) | THﾊﾟｲﾌﾟﾕﾆｯﾄ | | |

# Matrix

| No.17 | ﾄﾅｰﾊﾟｲﾌﾟ (Toner pipe) | | | | | | | | | | | | | | |
|---|---|---|---|---|---|---|---|---|---|---|---|---|---|---|---|
| PARTS CODE | Black | Cyan | | | | | | | | | | | | | |
| PPiPP0261FCZZ | 1st lot | | | | | | | | | | | | | | |
| PPiPP0262FCZZ | | 1st lot | | | | | | | | | | | | | |

| No.502 | TH ﾊﾟｲﾌﾟﾕﾆｯﾄ (TH pipe unit) | | | | | | | | | | | | | | |
|---|---|---|---|---|---|---|---|---|---|---|---|---|---|---|---|
| PARTS CODE | Black | Cyan | | | | | | | | | | | | | |
| CPiPP0261DS51 | 1st lot | | | | | | | | | | | | | | |
| CPiPP0262DS51 | | 1st lot | | | | | | | | | | | | | |

## 41 ﾄﾅｰ搬送部 3(Toner transport section 3)

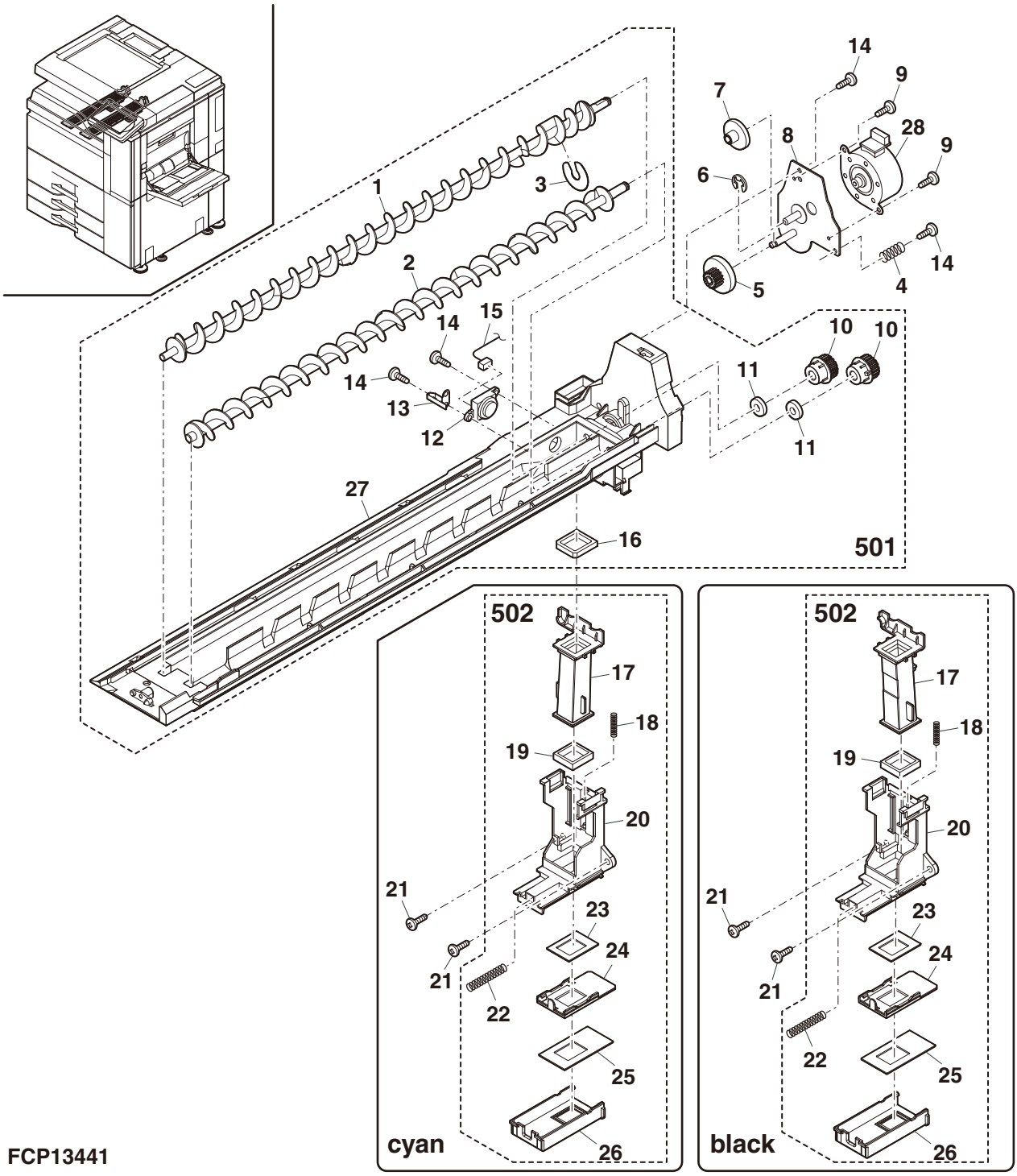


FCP13441

## 42 DV ユニット 1(DV unit 1)

| NO. | PARTS CODE | Inter-change | PRICE RANK Ex. | PRICE RANK Ja. | NEW MARK | PART RANK | DESCRIPTION | | TR No. | Effective time |
|---|---|---|---|---|---|---|---|---|---|---|
| 1 | PCOVP2499FCZ1 | | AH | DX | N | C | Filter cover | ﾌｨﾙﾀｰｶﾊﾞｰ | | 1st lot |
| 2 | XBBS730P06000 | | AC | DD | | C | Screw(3×6) | ﾋﾞｽ | | |
| 3 | NSFTP3660FCZZ | | AF | DS | N | C | TN pipe shaft | TNﾊﾟｲﾌﾟｼｬﾌﾄ | | |
| 4 | CHLDZ2326DS51 | | AN | EQ | N | E | Filter holder unit | ﾌｨﾙﾀｰﾎﾙﾀﾞｰﾕﾆｯﾄ | | |
| 5 | MSPRC3530FCZZ | | AB | DJ | | C | DV pressure spring | DV圧接ｽﾌﾟﾘﾝｸﾞ | | |
| 6 | PCOVP2435FCZZ | | AE | DS | N | C | DV shutter cover | DVｼｬｯﾀｰｶﾊﾞｰ | | |
| 7 | XEBS730P08000 | | AC | DD | | C | Screw(3×8) | ﾋﾞｽ | | |
| 8 | LHLDZ2250FCZZ | | AC | DD | N | C | DV shutter holder | DVｼｬｯﾀｰﾎﾙﾀﾞｰ | | |
| 9 | PSHEP6397FCZZ | | AA | DD | N | C | DV shutter sheet | DVｼｬｯﾀｰｼｰﾄ | | |
| 10 | PSEL-1137FCZZ | | AC | DD | N | C | Drop port seal upper | 落下口ｼｰﾙ上 | | |
| 11 | MSPRC0002YSZZ | | AA | DJ | | C | Shutter spring | ｼｬｯﾀｰｽﾌﾟﾘﾝｸﾞ | | |
| 12 | PSEL-1138FCZZ | | AC | DD | N | C | Drop port seal lower | 落下口ｼｰﾙ下 | | |
| 13 | LX-BZ1072FCZZ | | AB | DD | | C | Blue screw(4×8) | 青ﾋﾞｽ | | |
| 14 | LPLTM8261FCZZ | | AB | DD | N | C | Magnetism plate | 磁性ﾌﾟﾚｰﾄ | | |
| 15 | PSEL-1168FCZZ | | AC | DD | N | D | Cover duct seal L | ｶﾊﾞｰﾀﾞｸﾄｼｰﾙL | | |
| 16 | PSEL-1161FCZZ | | AC | DD | N | D | Filter seal B | ﾌｨﾙﾀｰｼｰﾙB | | |
| 17 | PSEL-1162FCZZ | | AB | DD | N | D | Filter seal FB | ﾌｨﾙﾀｰｼｰﾙFB | | |
| 18 | PSEL-1163FCZZ | | AA | DD | N | D | Filter seal F | ﾌｨﾙﾀｰｼｰﾙF | | |
| 19 | LPLTM0194QSZZ | | AC | DJ | | C | DV box fixing plate | 現像槽固定板 | | |
| 20 | PCOVP2434FCZZ | | AQ | EQ | N | C | DV upper cover | DV上ｶﾊﾞｰ | | |
| | PCOVP2434FCZ1 | 3 | AP | EQ | N | C | DV upper cover | DV上ｶﾊﾞｰ | | Mar/12 |
| | PCOVP2434FCZ2 | 3 | AP | EQ | N | C | DV upper cover | DV上ｶﾊﾞｰ | | Oct/12 R/C |
| 21 | PMLT-1977FCZZ | | AB | DD | N | C | DV upper cover cushion | DV上ｶﾊﾞｰﾓﾙﾄ | | |
| | PMLT-1977FCZ1 | 3 | AB | DD | N | C | DV upper cover cushion | DV上ｶﾊﾞｰﾓﾙﾄ | | May/12 |
| | PMLT-1977FCZ2 | 3 | AC | DJ | N | C | DV upper cover cushion | DV上ｶﾊﾞｰﾓﾙﾄ | | Jun/12 |
| | PMLT-1977FCZ3 | 3 | AC | DJ | N | C | DV upper cover cushion | DV上ｶﾊﾞｰﾓﾙﾄ | | May/13 |
| 22 | UCLE-0226FCZZ | | AF | DS | N | A | DV blade upper | DVﾌﾞﾚｰﾄﾞ上 | | |
| 23 | LPLTM8264FCZZ | | AX | FG | N | C | Doctor fixing plate | ﾄﾞｸﾀｰ取付板 | | |
| 24 | QSLP-0277FCZZ | | AC | DD | N | B | DV plug | DV端子 | | |
| 25 | CPLTM8262FC01 | | AP | EQ | N | C | DV doctor | DVﾄﾞｸﾀｰ | | |
| 26 | LPLTM8266FCZZ | | AC | DD | N | C | PP plate | PPﾌﾟﾚｰﾄ | | |
| 27 | XBBBZ30P04000 | | AA | DD | | C | Screw(3×4) | ﾋﾞｽ | | |
| 28 | PCOVP2436FCZZ | | AL | EB | N | C | Doctor cover | ﾄﾞｸﾀｰｶﾊﾞｰ | | |
| 29 | UCLE-0227FCZZ | | AE | DS | N | A | DV blade lower | DVﾌﾞﾚｰﾄﾞ下 | | |
| 30 | PMLT-1980FCZZ | | AB | DD | N | C | Doctor cover cushion C | ﾄﾞｸﾀｰｶﾊﾞｰﾓﾙﾄC | | |
| 31 | XBBS730P04000 | | AA | DD | | C | Screw(3×4) | ﾋﾞｽ | | |
| 32 | LHLDZ2327FCZZ | | AG | DS | N | C | MX holder R | MXﾎﾙﾀﾞｰR | | |
| 33 | PSEL-1143FCZ1 | | AA | DD | N | C | DV-BOX seal LR | DV-BOXｼｰﾙLR | | 1st lot |
| | PSEL-1143FCZ2 | 1 | AA | DD | N | C | DV-BOX seal LR | DV-BOXｼｰﾙLR | | May/13 |
| 34 | PSEL-1144FCZ1 | | AA | DD | N | C | DV-BOX seal FB | DV-BOXｼｰﾙFB | | 1st lot |
| | PSEL-1144FCZ2 | | AA | DD | N | C | DV-BOX seal FB | DV-BOXｼｰﾙFB | | May/13 |
| 35 | PSHEP6425FCZZ | | AD | DJ | N | C | ATC cover mylar | ATCｶﾊﾞｰﾏｲﾗｰ | | |
| 36 | RDTCT0237FCZZ | | AW | FG | N | B | ATC sensor(Refer to Matrix) | ATCｾﾝｻｰ | | |
| | RDTCT0238FCZZ | 1 | AW | FG | N | B | ATC sensor(Refer to Matrix) | ATCｾﾝｻｰ | | Sep/12 R/C |
| 37 | XEBS730P05000 | | AA | DD | | C | Screw(3×5) | ﾋﾞｽ | | |
| 38 | PCOVP2437FCZZ | | AF | DS | N | C | DV cover F | DVｶﾊﾞｰF | | |
| 39 | MLEVP1254FCZZ | | AD | DD | N | C | DV lock lever | DVﾛｯｸﾚﾊﾞｰ | | |
| 40 | PMLT-1985FCZZ | | AB | DD | N | C | DV pipe cushion lower | DVﾊﾟｲﾌﾟﾓﾙﾄ下 | | |
| 41 | TLABH4997FCZ1 | | AA | DJ | | D | Color label(Refer to Matrix) | ｶﾗｰﾗﾍﾞﾙ | | |
| | TLABH4998FCZ1 | | AA | DJ | | D | Color label(Refer to Matrix) | ｶﾗｰﾗﾍﾞﾙ | | |
| | TLABH4999FCZ1 | | AA | DJ | | D | Color label(Refer to Matrix) | ｶﾗｰﾗﾍﾞﾙ | | |
| | TLABH5000FCZ1 | | AA | DJ | | D | Color label(Refer to Matrix) | ｶﾗｰﾗﾍﾞﾙ | | |
| 45 | PSEL-1145FCZZ | | AD | DJ | N | C | DV duct seal F | DVﾀﾞｸﾄｼｰﾙF | | |
| 46 | PGiDM2646FCZZ | | AM | EG | N | C | DV guide(Refer to Matrix) | DVｶﾞｲﾄﾞ | | |
| | PGiDM2647FCZZ | | AM | EG | N | C | DV guide(Refer to Matrix) | DVｶﾞｲﾄﾞ | | |
| | PGiDM2648FCZZ | | AM | EG | N | C | DV guide(Refer to Matrix) | DVｶﾞｲﾄﾞ | | |
| | PGiDM2649FCZZ | | AN | EG | N | C | DV guide(Refer to Matrix) | DVｶﾞｲﾄﾞ | | |
| 47 | TLABZ4716FCZZ | | CX | ** | | D | DV box label | 現像槽ﾗﾍﾞﾙ | | |
| 48 | DHAi-5037FCPZ | | BQ | LP | N | C | DV harness | DVﾊｰﾈｽ | | |
| 49 | PSEL-1167FCZZ | | AB | DD | N | D | Guide duct seal B | ｶﾞｲﾄﾞﾀﾞｸﾄｼｰﾙB | | |
| 50 | PMLT-2027FCZ1 | | AC | DD | N | C | DV duct cushion | DVﾀﾞｸﾄﾓﾙﾄ | | 1st lot |
| 51 | PSEL-1179FCZZ | | AC | DD | N | C | Doctor side seal | ﾄﾞｸﾀｰｻｲﾄﾞｼｰﾄ | | 1st lot |
| 501 | CCOVP2434DS51 | | AY | FQ | N | E | DV cover unit | DVｶﾊﾞｰﾕﾆｯﾄ | | |
| 502 | CBOX-0210DS51 | | BU | NU | N | E | DV-BOX unit[Include Block[43]] | DV-BOXﾕﾆｯﾄ | | |
| 503 | CCOVP2436DS51 | | AQ | EQ | N | E | Doctor cover unit | ﾄﾞｸﾀｰｶﾊﾞｰﾕﾆｯﾄ | | |
| | (Unit) | | | | | | | | | |
| 901 | DUNT-8747DS11 | | BW | RJ | N | E | DV unit(Refer to Matrix) [Include Block[43]] | DVﾕﾆｯﾄ | | |
| | DUNT-8747DS12 | | BW | RJ | N | E | DV unit(Refer to Matrix) [Include Block[43]] | DVﾕﾆｯﾄ | | |
| | DUNT-8747DS13 | | BW | RJ | N | E | DV unit(Refer to Matrix) [Include Block[43]] | DVﾕﾆｯﾄ | | |
| | DUNT-8747DSZZ | | BW | RJ | N | E | DV unit(Refer to Matrix) [Include Block[43]] | DVﾕﾆｯﾄ | | |

42 DV ﾕﾆｯﾄ 1(DV unit 1)

## Matrix

| No.36 | ATC ｾﾝｻｰ (ATC sensor) | | | | | | | | | | | | | | |
|---|---|---|---|---|---|---|---|---|---|---|---|---|---|---|---|
| PARTS CODE | Color | Black | | | | | | | | | | | | | |
| RDTCT0237FCZZ | | 1st lot | | | | | | | | | | | | | |
| RDTCT0238FCZZ | 1st lot | sep/12 R/C | | | | | | | | | | | | | |

| No.41 | ｶﾗｰﾗﾍﾞﾙ (Color label) | | | | | | | | | | | | | | |
|---|---|---|---|---|---|---|---|---|---|---|---|---|---|---|---|
| PARTS CODE | Black | Cyan | Magenta | Yellow | | | | | | | | | | | |
| TLABH4997FCZ1 | 1st lot | | | | | | | | | | | | | | |
| TLABH4998FCZ1 | | 1st lot | | | | | | | | | | | | | |
| TLABH4999FCZ1 | | | 1st lot | | | | | | | | | | | | |
| TLABH5000FCZ1 | | | | 1st lot | | | | | | | | | | | |

| No.46 | DV ｶﾞｲﾄﾞ (DV guide) | | | | | | | | | | | | | | |
|---|---|---|---|---|---|---|---|---|---|---|---|---|---|---|---|
| PARTS CODE | Black | Cyan | Magenta | Yellow | | | | | | | | | | | |
| PGiDM2646FCZZ | 1st lot | | | | | | | | | | | | | | |
| PGiDM2647FCZZ | | 1st lot | | | | | | | | | | | | | |
| PGiDM2648FCZZ | | | 1st lot | | | | | | | | | | | | |
| PGiDM2649FCZZ | | | | 1st lot | | | | | | | | | | | |

| No.901 | DV ﾕﾆｯﾄ (DV unit) | | | | | | | | | | | | | | |
|---|---|---|---|---|---|---|---|---|---|---|---|---|---|---|---|
| PARTS CODE | Cyan | Magenta | Yellow | Black | | | | | | | | | | | |
| DUNT-8747DS11 | 1st lot | | | | | | | | | | | | | | |
| DUNT-8747DS12 | | 1st lot | | | | | | | | | | | | | |
| DUNT-8747DS13 | | | 1st lot | | | | | | | | | | | | |
| DUNT-8747DSZZ | | | | 1st lot | | | | | | | | | | | |

## 42 DV ユニット 1(DV unit 1)

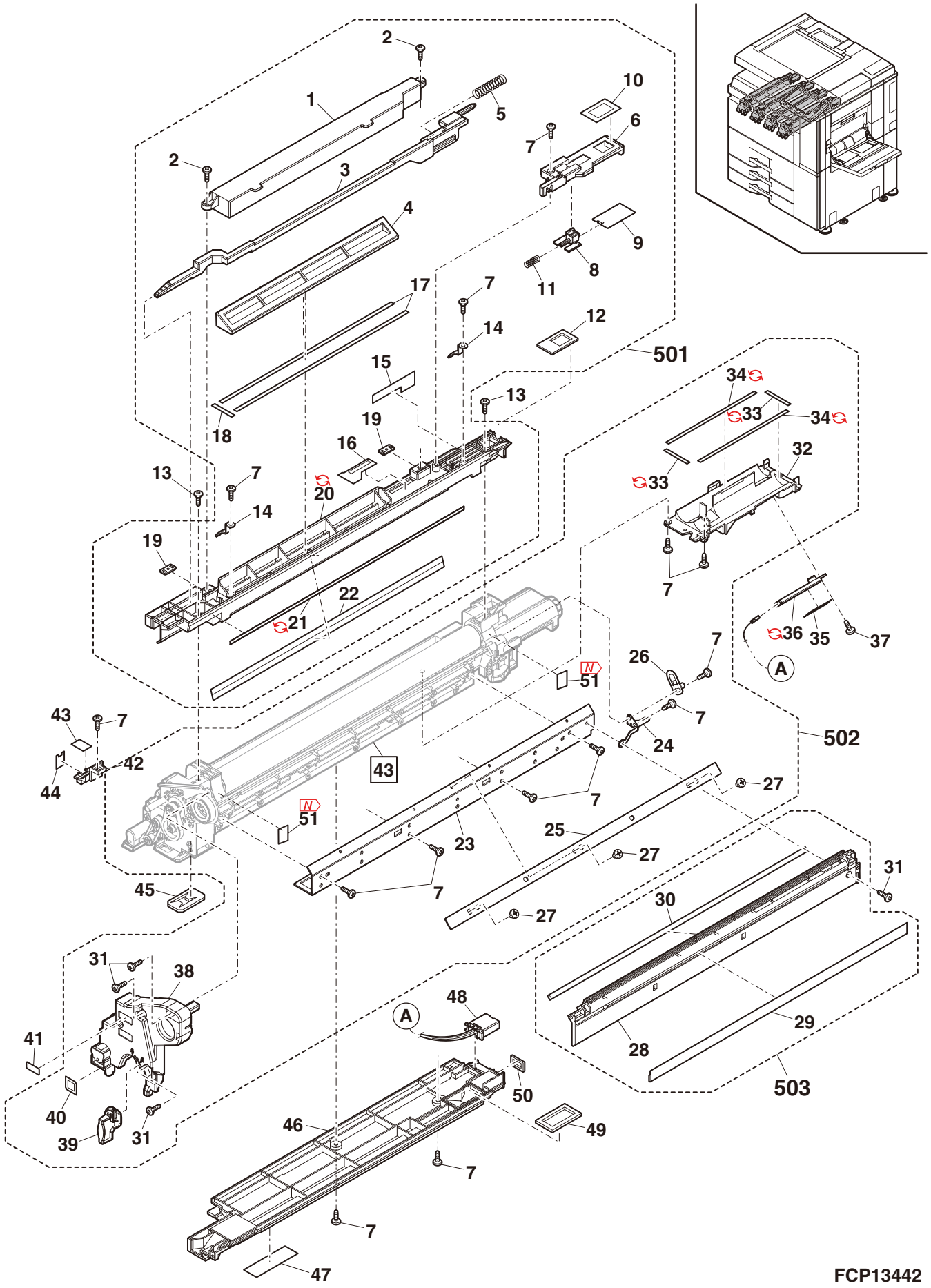

## 43 DV ユニット 2(DV unit 2)

| NO. | PARTS CODE | Inter-change | PRICE RANK Ex. | PRICE RANK Ja. | NEW MARK | PART RANK | DESCRIPTION | | TR No. | Effective time |
|---|---|---|---|---|---|---|---|---|---|---|
| 1 | NROLM1969FCZZ | | BR | LX | N | C | MG roller | MG ローラー | | |
| 2 | CHLDZ1734FC02 | | AV | FG | N | C | MGR holder RAS | MGR ホルダー RAS | | |
| 3 | XRESP80-08000 | | AA | DD | | C | E ring(E8) | E リング | | |
| 4 | NBLTH0598FCZZ | | AL | EB | N | B | DV belt(108) | DV ベルト | | |
| 5 | LPiNS0337FCZZ | | AB | DJ | | C | Pin(φ3-12) | 平行ピン | | |
| 6 | NPLYZ0546FCZZ | | AC | DD | N | C | MG pulley F | MG プーリー F | | |
| 7 | NROLP1971FCZZ | | AU | EZ | N | C | MX roller L | MX ローラー L | | |
| | NROLP1971FCZ1 | 3 | AU | EZ | N | C | MX roller L | MX ローラー L | | Sep/12 R/C |
| 8 | NROLP1970FCZZ | | AU | EZ | N | C | MX roller R | MX ローラー R | | |
| 9 | PBOX-0210FCZZ | | AU | EZ | N | C | DV-BOX | DV-BOX | | |
| | PBOX-0210FCZ1 | 3 | AT | EZ | N | C | DV-BOX | DV-BOX | | Mar/12 |
| | PBOX-0210FCZ2 | 3 | AT | EZ | N | C | DV-BOX | DV-BOX | | Oct/12 R/C |
| 10 | LHLDZ2251FCZZ | | AD | DD | N | C | MG holder R | MG ホルダー R | | |
| 11 | XRESP70-08000 | | AA | DD | | C | E ring(E7) | E リング | | |
| 12 | CBRGP0787FC02 | | AM | EG | N | C | Agitator bearing | アジテータベアリング | | |
| 13 | NBLTH0459FCZZ | | AD | DJ | | B | DV belt B | DV ベルト B | | |
| 14 | NPLYZ0547FCZZ | | AC | DD | N | C | MX pulley F | MX プーリー F | | |
| 15 | XRESP40-06000 | | AA | DD | | C | E ring(E4) | E リング | | |
| 16 | NPLYZ0548FCZZ | | AC | DD | N | C | Coupling pulley | カップリングプーリー | | |
| 17 | XBBS730P04000 | | AA | DD | | C | Screw(3×4) | ビス | | |
| 18 | PSHEP6399FCZZ | | AD | DJ | N | C | DV side sheet R | DV サイドシート R | | |
| 19 | PSEL-1164FCZZ | | AB | DD | N | D | Separate plate seal B | 仕切板シール B | | |
| 20 | PSEL-1163FCZZ | | AA | DD | N | D | Filter seal F | フィルターシール F | | |
| 21 | LPLTP8401FCZZ | | AD | DJ | N | C | MX separate plate | MX 仕切板 | | |
| 22 | PSEL-1166FCZZ | | AA | DD | N | D | Separate plate seal F | 仕切板シール F | | |
| 23 | PSEL-1165FCZZ | | AA | DD | N | D | Separate plate seal FBR | 仕切板シール FBR | | |
| 24 | PSHEP6398FCZZ | | AD | DJ | N | C | DV side sheet F | DV サイドシート F | | |
| 25 | PSEL-1146FCZZ | | AB | DD | N | C | DV duct seal R | DV ダクトシール R | | |
| 26 | LHLDZ2252FCZZ | | AD | DD | N | C | MX holder F | MX ホルダー F | | |
| 27 | LPLTM6022FCZZ | | AC | DJ | | C | M4 plate | M4 プレート | | |
| 28 | PMLT-1982FCZ1 | | AC | DD | N | C | DV side cushion F | DV サイドモルト F | | |
| | PMLT-1982FCZ2 | 3 | AC | DD | N | C | DV side cushion F | DV サイドモルト F | | May/12 |
| 29 | PMLT-1983FCZZ | | AC | DD | N | C | DV side cushion R | DV サイドモルト R | | |
| | PMLT-1983FCZ1 | 3 | AC | DD | N | C | DV side cushion R | DV サイドモルト R | | May/12 |
| 30 | PMLT-1984FCZZ | | AB | DD | N | C | DV pipe cushion upper | DV パイプモルト上 | | |
| | PMLT-1984FCZ1 | 3 | AB | DD | N | C | DV pipe cushion upper | DV パイプモルト上 | | May/12 |
| 31 | PMLT-1986FCZZ | | AC | DD | N | C | Doctor back cushion | ドクター裏モルト | | |
| 32 | XEBS730P08000 | | AC | DD | | C | Screw(3×8) | ビス | | |
| 33 | NBRGY0769FCZ2 | | AQ | EB | | C | MG bearing | MG 軸受 | | |
| | NBRGC0770FCZZ | 1 | AH | DX | | C | DMX bearing | MG 軸受 | | Feb/13 |
| 34 | LHLDZ2256FCZZ | | AF | DS | N | C | Trickle holder | トリクルホルダー | | |
| 35 | NBRGP0952FCZZ | | AL | EB | | C | Bearing A(φ5) | 軸受 A | | |
| 36 | NGERH2269FCZZ | | AC | DD | N | C | TR screw gear | TR スクリューギヤ | | |
| 37 | XRESP30-06000 | | AA | DD | | C | E ring(E3) | E リング | | |
| 38 | NGERH2268FCZZ | | AC | DD | N | C | TR joint gear | TR 連結ギヤ | | |
| 39 | NBRGP0873FCZZ | | AC | DJ | | C | Transfer roller bearing | 転写ローラー軸受 | | |
| 40 | PSEL-1141FCZZ | | AB | DD | N | C | TR seal C | TR シール C | | |
| 41 | MSPRC3950FCZZ | | AC | DJ | | C | DV pressure spring | DV 圧接スプリング | | |
| 42 | PSEL-1142FCZZ | | AA | DD | N | C | TR shutter seal upper | TR シャッターシール上 | | |
| 43 | PPiPP0260FCZZ | | AD | DJ | N | C | Trickle pipe | トリクルパイプ | | |
| 44 | NSFTZ3652FCZZ | | AF | DS | N | C | TR joint shaft | TR 連結シャフト | | |
| 45 | NGERH2267FCZZ | | AD | DJ | N | C | TR idle gear pulley B | TR アイドルギヤ プーリー B | | |
| 46 | NBLTH0494FCZZ | | AD | DJ | | B | DV belt B | DV ベルト B | | |
| 47 | NPLYZ0551FCZZ | | AC | DD | N | C | TR joint pulley | TR 連結プーリー | | |
| 48 | NBRGY0976FCZZ | | AC | DD | N | C | TH drive bearing | TH 駆動軸受 | | |
| 49 | NGERH2266FCZZ | | AD | DJ | N | C | TR idle gear pulley A | TR アイドルギヤ プーリー A | | |
| 50 | NBLTH0599FCZZ | | AF | DS | N | B | DV belt(100) | DV ベルト | | |
| 51 | LHLDZ2254FCZZ | | AC | DD | N | C | MG holder F | MG ホルダー F | | |
| 52 | CPLTM8265FC01 | | AL | EB | N | C | DSD plate | DSD プレート | | |
| 53 | LHLDZ2255FCZZ | | AC | DD | N | C | DSD holder F | DSD ホルダー F | | |
| 54 | NBRGY0988FCZZ | | AN | EG | N | C | Bearing | ベアリング | | |
| 55 | LX-BZ1187FCZZ | | AA | DD | | C | Screw(3×6) | ビス | | |
| 56 | NSRW-0084FCZZ | | AL | EB | N | C | Trickle screw | トリクルスクリュー | | |
| 57 | NBRGY0931FCZZ | | AK | DX | N | C | Drum drive bearing BRN | ドラム駆動軸受 BRN | | |
| 58 | PSHT-0156FCZZ | | AC | DD | N | C | Trickle shutter | トリクルシャッター | | |
| 59 | LDAiU0875FCZ2 | | AD | DJ | N | C | DV TR block | DV TR ブロック | | 1st lot |
| 60 | PSEL-1150FCZZ | | AA | DD | N | C | TR seal upper | TR シール上 | | |
| 61 | PSEL-1140FCZ2 | | | | N | C | TR port seal | TR ポートシール | | |
| 62 | N PSEL-1178FCZZ | 4 | AC | DD | N | C | TR shutter seal upper | TR シャッターシール上 | | Jun/12 |
| | PSEL-1178FCZ1 | 1 | AC | DD | N | C | TR shutter seal upper | TR シャッターシール上 | | Feb/13 |
| 63 | N PSHEZ6525FCZZ | 4 | AD | DD | N | C | TR sheet | TR シート | | May/12 |

## 43 DV ユニット 2(DV unit 2)

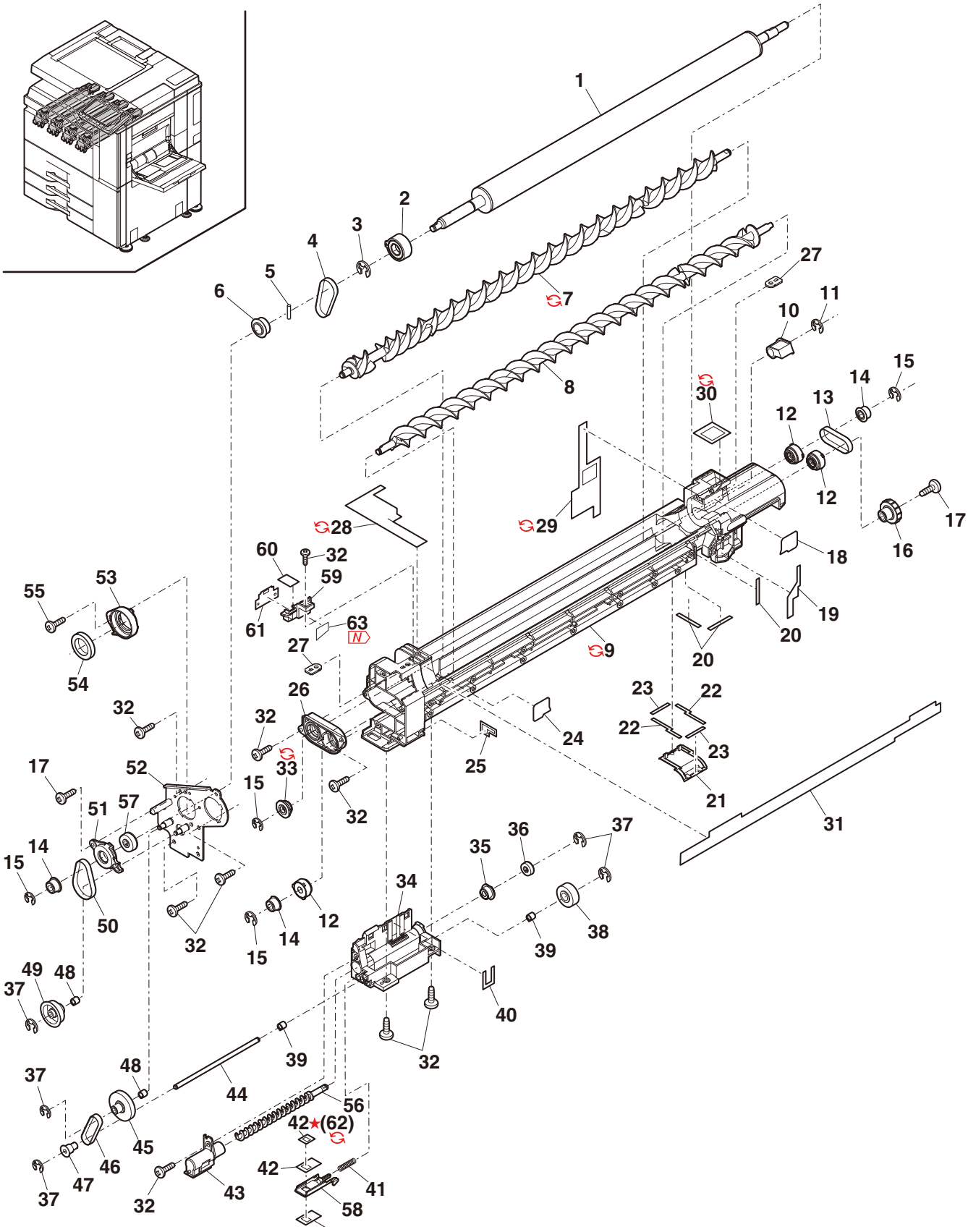

## 44 ﾌﾟﾛｾｽﾕﾆｯﾄ 1(Process unit 1)

| NO. | PARTS CODE | Inter-change | PRICE RANK Ex. | PRICE RANK Ja. | NEW MARK | PART RANK | DESCRIPTION | | TR No. | Effective time |
|---|---|---|---|---|---|---|---|---|---|---|
| 1 | LHLDZ2275FCZ1 | | AH | DX | | C | DL holder | DL ﾎﾙﾀﾞｰ | | |
| 2 | CPWBF2033FCE1 | | AV | FG | N | E | DL PWB | DL PWB | | |
| 3 | PCOVP2493FCZZ | | AK | DX | N | D | DL protect cover | DL 保護ｶﾊﾞｰ | | |
| 4 | PCOVP2492FCZZ | | AD | DJ | N | D | Front harness cover | ﾌﾛﾝﾄﾊｰﾈｽｶﾊﾞｰ | | |
| 5 | PSHEP6405FCZZ | | AD | DJ | N | C | TCDL shade sheet | TCDL 遮光ｼｰﾄ | | |
| | ☒ PSHEP6405FCZZ | 1 | AD | DJ | N | C | TCDL shade sheet | TCDL 遮光ｼｰﾄ | | 12/Oct R/C |
| 6 | PCOVP2491FCZZ | | AN | EG | N | D | TCDL protect cover | TCDL 保護ｶﾊﾞｰ | | |
| 7 | PCOVP2447FCZZ | | AK | DX | N | D | Toner receive cover | ﾄﾅｰ受けｶﾊﾞｰ | | |
| | ↻ PCOVP2447FCZ1 | 3 | AH | DX | N | D | Toner receive cover | ﾄﾅｰ受けｶﾊﾞｰ | | 12/May R/C |
| | ↻ PCOVP2447FCZ2 | 3 | AH | DX | N | D | Toner receive cover | ﾄﾅｰ受けｶﾊﾞｰ | | 12/Oct R/C |
| 8 | XBBS730P08000 | | AA | DD | | C | Screw(3×8) | ﾋﾞｽ | | |
| 9 | PMLT-2050FCZZ | | AA | DD | N | C | Back side seal cushion B | 背面ｼｰﾙﾓﾙﾄ B | | |
| 10 | PMLT-2069FCZ1 | | AB | DD | | C | Toner receive cushion C | ﾄﾅｰ受けｶﾊﾞｰﾓﾙﾄ C | | |
| 11 | PMLT-2034FCZZ | | AA | DD | N | C | Toner receive cushion A | ﾄﾅｰ受けｶﾊﾞｰﾓﾙﾄ A | | |
| 12 | PMLT-2035FCZZ | | AC | DD | N | C | Toner receive cushion B | ﾄﾅｰ受けｶﾊﾞｰﾓﾙﾄ B | | |
| 13 | QEARP0340FCZZ | | AB | DD | N | C | back side plate earth plate | 背面ﾌﾟﾚｰﾄｱｰｽ板 | | |
| 14 | LX-BZ0586FCZZ | | AA | DD | | C | Screw(4×6) | ﾋﾞｽ | | |
| 15 | LPLTM8281FCZZ | | AL | EB | N | C | Process back side plate | ﾌﾟﾛｾｽ背面ﾌﾟﾚｰﾄ | | |
| 16 | MSPRT4310FCZZ | | AC | DD | N | C | Blade pressure spring | ﾌﾞﾚｰﾄﾞ加圧ｽﾌﾟﾘﾝｸﾞ | | |
| 17 | PSHEP6472FCZZ | | AC | DD | | C | Back side plate sheet | 背面ﾌﾟﾚｰﾄｼｰﾄ | | |
| 18 | PSHEP6428FCZZ | | AD | DJ | N | C | Process back side sheet | ﾌﾟﾛｾｽ背面ｼｰﾄ | | |
| 19 | PMLT-2049FCZZ | | AE | DJ | N | C | Back side seal cushion A | 背面ｼｰﾙﾓﾙﾄ A | | |
| 20 | PSHEP6429FCZ1 | | AH | DX | N | C | Process air sheet | ﾌﾟﾛｾｽｴｱｰｼｰﾄ | | |
| 21 | PSEL-1155FCZZ | | AG | DS | N | D | Duct lower seal | ﾀﾞｸﾄ下ｼｰﾙ | | |
| 22 | PMLT-2032FCZ1 | | AH | DX | | C | Process air intake port cushion | ﾌﾟﾛｾｽ吸気口ﾓﾙﾄ | | |
| 23 | PSHEP6403FCZZ | | AF | DS | N | C | MC cover sheet | MC ｶﾊﾞｰｼｰﾄ | | |
| 24 | PCOVP2446FCZZ | | AK | EB | N | D | MC cover | MC ｶﾊﾞｰ | | |
| 25 | LX-BZ1082FCZZ | | AB | DD | | C | Blue screw(3×8) | 青ﾋﾞｽ | | |
| 26 | MLEVP1255FCZZ | | AD | DJ | N | C | Process lock lever | ﾌﾟﾛｾｽﾛｯｸﾚﾊﾞｰ | | |
| 27 | PCOVP2448FCZZ | | AG | DS | N | D | Process F cover | ﾌﾟﾛｾｽ F ｶﾊﾞｰ | | |
| 28 | QEARP0339FCZZ | | AC | DD | N | C | Brush earth plate | ﾌﾞﾗｼｱｰｽ板 | | |
| 30 | PMLT-1996FCZZ | | AC | DD | N | C | MC cover seal cushion | MC ｶﾊﾞｰｼｰﾙﾓﾙﾄ | | |
| 31 | PSHEP6421FCZZ | | AC | DD | N | C | Harness sheet | ﾊｰﾈｽｼｰﾄ | | |
| 32 | XEPS730P08X00 | | AA | DD | | C | Screw(3×8X) | ﾋﾞｽ | | |
| 33 | XEBS730P08000 | | AC | DD | | C | Screw(3×8) | ﾋﾞｽ | | |
| 34 | PSHEP6402FCZ1 | | AF | DS | | C | Toner receive sheet | ﾄﾅｰ受けｼｰﾄ | | |
| 35 | PMLT-2048FCZZ | | AB | DD | N | C | Shutter cushion | ｼｬｯﾀｰﾓﾙﾄ | | |
| | | | | | | | | | | |
| | (Unit) | | | | | | | | | |
| 901 | CFRM-1565DS51 | | BP | LP | N | E | Process frame unit [Include Block[45]] | ﾌﾟﾛｾｽﾌﾚｰﾑﾕﾆｯﾄ | | |

## 44 ﾌﾟﾛｾｽﾕﾆｯﾄ 1(Process unit 1)

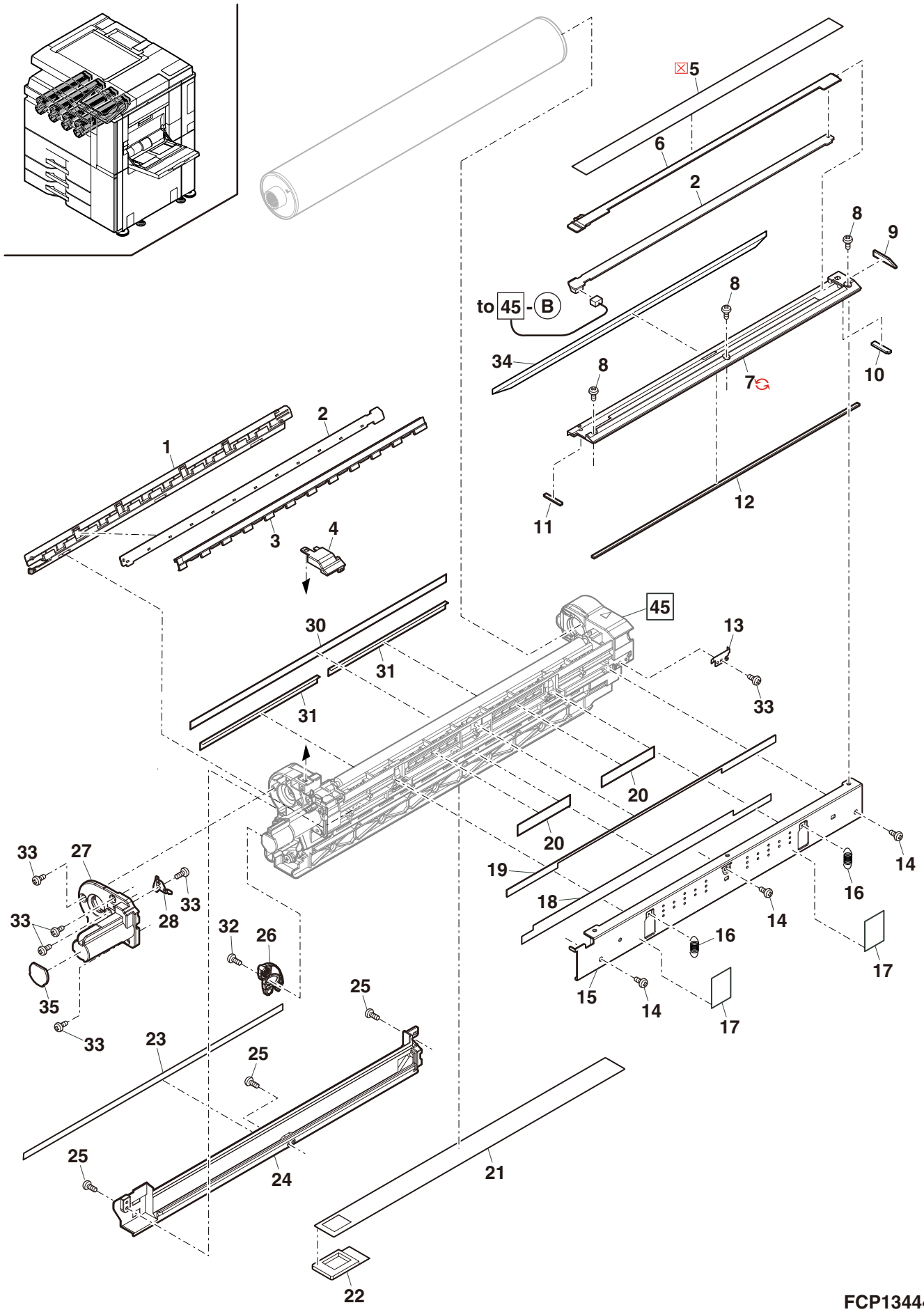


FCP13444

## 45 ﾌﾟﾛｾｽﾕﾆｯﾄ 2(Process unit 2)

| NO. | PARTS CODE | Inter-change | PRICE RANK Ex. | PRICE RANK Ja. | NEW MARK | PART RANK | DESCRIPTION | | TR No. | Effective time |
|---|---|---|---|---|---|---|---|---|---|---|
| 1 | NROLN1972FCZZ | | BA | FX | N | C | CL brush roller | CL ﾌﾞﾗｼﾛｰﾗｰ | | |
| 2 | NBRGP0973FCZZ | | AF | DS | N | C | Brush bearing F | ﾌﾞﾗｼ軸受 F | | |
| 3 | CCLEZ0233FC32 | | AY | FQ | | A | Cleaning blade | ｸﾘｰﾆﾝｸﾞﾌﾞﾚｰﾄﾞ | | |
| 4 | LX-BZ1081FCZZ | | AB | DD | | C | Screw(3×5) | ﾋﾞｽ | | |
| 5 | LPLTM8280FCZZ | | AK | DX | N | C | Blade support plate | ﾌﾞﾚｰﾄﾞ保持板 | | |
| 6 | PSHEP6454FCZZ | | AH | DX | N | C | Toner scatter sheet | ﾄﾅｰ撹拌ｼｰﾄ | | |
| 7 | PMLT-2051FCZZ | | AA | DD | N | C | Back side seal cushion C | 背面ｼｰﾙﾓﾙﾄ C | | |
| 8 | PMLT-2003FCZ2 | | AE | DJ | N | C | Blade lower cushion | ﾌﾞﾚｰﾄﾞ下ﾓﾙﾄ | | |
| 9 | LFRM-1565FCZZ | | AX | FG | N | C | Process frame | ﾌﾟﾛｾｽﾌﾚｰﾑ | | |
| 10 | PMLT-2070FCZZ | | AC | DD | N | C | Blade spacer | ﾌﾞﾚｰﾄﾞｽﾍﾟｰｻｰ | | |
| 11 | PMLT-2005FCZ2 | | | | N | C | Blade side cushion R | ﾌﾞﾚｰﾄﾞｻｲﾄﾞﾓﾙﾄ R | | |
| 12 | PSEL-1154FCZZ | | AD | DJ | N | D | Side seal R | ｻｲﾄﾞｼｰﾙ R | | |
| 13 | PSEL-1153FCZZ | | AD | DJ | N | D | Side seal F | ｻｲﾄﾞｼｰﾙ F | | |
| 14 | MLOKZ0026FCZZ | | AC | DD | N | C | Drum lock | ﾄﾞﾗﾑﾛｯｸ | | |
| 15 | MSPRC4311FCZZ | | AC | DD | N | C | Drum lock spring | ﾄﾞﾗﾑﾛｯｸｽﾌﾟﾘﾝｸﾞ | | |
| 16 | NBRGP0974FCZZ | | AF | DS | N | C | Brush bearing R | ﾌﾞﾗｼ軸受 R | | |
| 17 | NCPL-0126FCZZ | | AD | DJ | N | C | Brush drive coupling | ﾌﾞﾗｼ駆動 ｶｯﾌﾟﾘﾝｸﾞ | | |
| 18 | CPLTM8279FC01 | | AG | DX | N | C | Process R plate | ﾌﾟﾛｾｽ R ﾌﾟﾚｰﾄ | | |
| | CPLTM8279FC02 | 1 | AG | DX | N | C | Process R plate | ﾌﾟﾛｾｽ R ﾌﾟﾚｰﾄ | | Sep/12 R/C |
| 19 | NGERH2283FCZZ | | AC | DD | N | C | DSD ratchet | DSD ﾗﾁｪｯﾄ | | |
| 20 | XEBS740P08000 | | AA | DD | | C | Screw(4×8) | ﾋﾞｽ | | |
| 21 | LX-BZ0260FCZZ | | AA | DD | | C | Screw(4×8) | ﾋﾞｽ | | |
| 22 | MCAMP0152FCZZ | | AD | DJ | N | C | DSD adjustment cam | DSD 調整ｶﾑ | | |
| 23 | NGERH2279FCZZ | | AE | DJ | N | C | Waste toner reduction gear | 廃ﾄﾅｰ減速ｷﾞﾔ | | |
| 24 | QEARB0342FCZZ | | AE | DJ | N | C | Process earth spring | ﾌﾟﾛｾｽｱｰｽ ｽﾌﾟﾘﾝｸﾞ | | |
| 25 | LPiNS0358FCZZ | | AD | DJ | N | C | Blade pin R | ﾌﾞﾚｰﾄﾞﾋﾟﾝ R | | |
| 26 | DHAi-5036FCPZ | | AR | EQ | N | C | Process UN harness | ﾌﾟﾛｾｽ UN ﾊｰﾈｽ | | |
| 27 | NGERH2280FCZZ | | AC | DD | N | C | Waste toner screw gear | 廃ﾄﾅｰｽｸﾘｭｰｷﾞﾔ | | |
| 28 | PRNGP0081FCZ1 | | AB | DJ | | C | Resin ring(E4) | 樹脂ﾘﾝｸﾞ | | |
| 29 | NBRGP0748FCZZ | | AQ | EQ | | C | Waste toner bearing | 廃ﾄﾅｰ軸受 | | |
| 30 | PMLT-2037FCZZ | | AE | DS | N | C | Waste toner screw cushion | 廃ﾄﾅｰｽｸﾘｭｰﾓﾙﾄ | | |
| 31 | NSRW-0089FCZZ | | AG | DX | N | C | Waste toner screw | 廃ﾄﾅｰｽｸﾘｭｰ | | |
| 32 | LX-NZ0111FCZZ | | AA | DD | | C | M3 plate nut | M3 板ﾅｯﾄ | | |
| 33 | PMLT-2004FCZ2 | | | | N | C | Blade side cushion F | ﾌﾞﾚｰﾄﾞｻｲﾄﾞﾓﾙﾄF | | |
| 34 | LPiNS0357FCZZ | | AE | DS | N | C | Blade pin F | ﾌﾞﾚｰﾄﾞﾋﾟﾝ F | | |
| 35 | PMLT-1523FCZ1 | | AB | DJ | | C | Cleaner pat | ｸﾘｰﾅｰﾊﾟｯﾄ | | |
| 36 | XEBS730P08000 | | AC | DD | | C | Screw(3×8) | ﾋﾞｽ | | |
| 37 | PPiPP0265FCZZ | | AE | DJ | N | C | Waste toner pipe | 廃ﾄﾅｰﾊﾟｲﾌﾟ | | |
| 38 | PMLT-2036FCZZ | | AC | DD | N | C | Waste toner pipe cushion | 廃ﾄﾅｰﾊﾟｲﾌﾟﾓﾙﾄ | | |
| 39 | MSPRC4364FCZZ | | AC | DD | N | C | Shutter spring | ｼｬｯﾀｰｽﾌﾟﾘﾝｸﾞ | | |
| 40 | NBRGP0746FCZZ | | AQ | EQ | | C | Cleaner bearing | ｸﾘｰﾅｰ軸受 | | |
| 41 | NBRGY0986FCZZ | | AL | EB | N | C | Process bearing | ﾌﾟﾛｾｽ軸受 | | |
| 42 | PSHT-0106FCZZ | | AC | DJ | | C | Waste toner shutter | 廃ﾄﾅｰｼｬｯﾀｰ | | |
| 44 | LHLDZ2274FCZZ | | AD | DD | N | C | HP sensor holder | HP ｾﾝｻｰﾎﾙﾀﾞｰ | | |
| | LHLDZ2274FCZ1 | 3 | AD | DD | N | C | HP sensor holder | HP ｾﾝｻｰﾎﾙﾀﾞｰ | | Jul/12 R/C |
| 45 | VHPGP1A71L3-18 | | AG | DS | | B | Photo sensor(GP1A71L3) | ﾌｫﾄｾﾝｻｰ | | |
| 46 | XBBS730P08000 | | AA | DD | | C | Screw(3×8) | ﾋﾞｽ | | |

## 45 ﾌﾟﾛｾｽﾕﾆｯﾄ 2(Process unit 2)

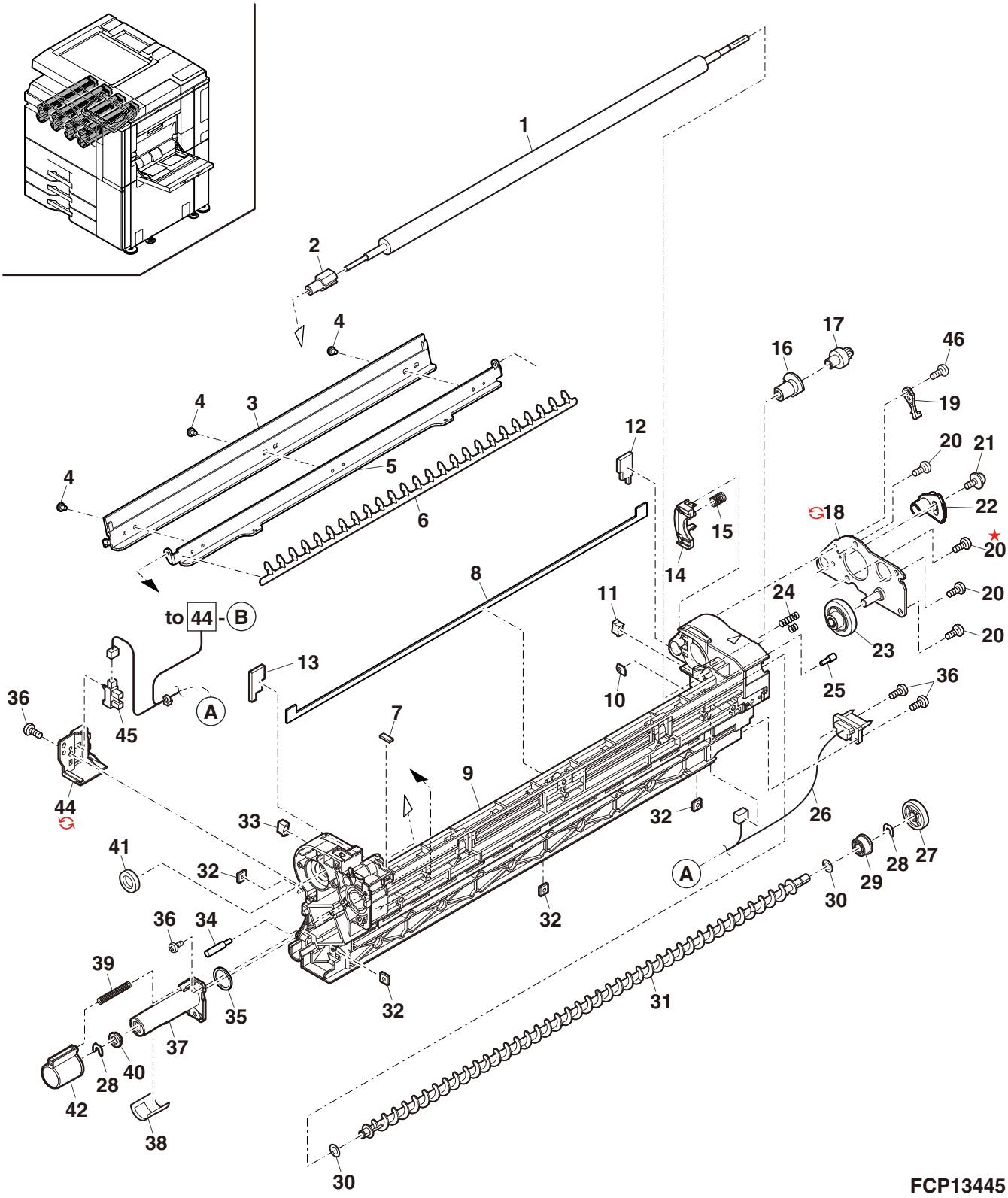

## 46 MC ユニット (MC unit)

| NO. | PARTS CODE | Inter-change | PACKING Ex. | PACKING Ja. | NEW MARK | PART RANK | DESCRIPTION | | TR No. | Effective time |
|---|---|---|---|---|---|---|---|---|---|---|
| 1 | LPLTM8383FCZZ | | AT | EZ | N | C | MC grid | MC ｸﾞﾘｯﾄﾞ | | |
| 2 | PSHEP6401FCZZ | | AA | DD | | C | Grid sheet | ｸﾞﾘｯﾄﾞｼｰﾄ | | |
| 3 | NSFTP3662FCZZ | | AD | DJ | | C | MC cleaner shaft | MCｸﾘｰﾅｰ軸 | | |
| 4 | UCLEZ0236FCZZ | | AQ | EQ | N | C | Cleaning rubber | ｸﾘｰﾆﾝｸﾞｺﾞﾑ | | 1st lot |
| 5 | XRESP20-04000 | | AA | DD | | C | E ring(E2) | Eﾘﾝｸﾞ | | |
| 6 | LHLDZ2273FCZZ | | AD | DJ | | C | MC cleaner holder | MCｸﾘｰﾅｰﾎﾙﾀﾞｰ | | |
| 7 | XEBS730P08000 | | AC | DD | | C | Screw(3×8) | ﾋﾞｽ | | |
| 8 | LPLTM8278FCZZ | | AD | DD | | C | Grid plate | ｸﾞﾘｯﾄﾞﾌﾟﾚｰﾄ | | |
| 9 | NSFTZ3663FCZZ | | AU | EZ | | C | MC drive shaft | MC駆動軸 | | |
| 10 | LPLTM8276FCZZ | | AN | EG | | C | MC plate A | MCﾌﾟﾚｰﾄA | | |
| 11 | LHLDZ2271FCZZ | | AL | EB | | C | MC holder A | MCﾎﾙﾀﾞｰA | | |
| | ↻ LHLDZ2271FCZ1 | 3 | | | N | C | MC holder A | MCﾎﾙﾀﾞｰA | | Oct/12 R/C |
| 12 | NCPL-0085FCZZ | | AE | DJ | | C | MC screw coupling | MCｽｸﾘｭｰｶｯﾌﾟﾘﾝｸﾞ | | |
| 13 | QSLP-0278FCZZ | | AD | DJ | | B | Saw plug | ﾉｺﾊﾞ端子 | | |
| 14 | LPLTM8382FCZZ | | AH | DX | | C | MC saw | MCﾉｺﾊﾞ | | |
| | ↻ LPLTM8672FCZZ | 1 | AH | DX | | C | MC saw | MCﾉｺﾊﾞ | | Mar/13 R/C |
| 15 | PTPE-0363FCZZ | | AC | DD | | C | Saw tape | ﾉｺﾊﾞﾃｰﾌﾟ | | |
| 16 | LHLDZ2272FCZZ | | AK | DX | | C | MC holder B | MCﾎﾙﾀﾞｰB | | |
| 17 | LPLTM8277FCZZ | | AL | EB | | C | MC plate B | MCﾌﾟﾚｰﾄB | | |
| 18 | LX-BZ1263FCZZ | | AA | DJ | | C | Screw(3×12.5) | ﾋﾞｽ | | |
| 19 | PMLT-2033FCZZ | | AF | DS | | C | MC lower cushion | MC下ﾓﾙﾄ | | |
| 20 | QEARP0341FCZZ | | AC | DD | | C | MC drive shaft earth plate | MC 駆動軸ｱｰｽ板 | | |
| 21 | LX-BZ1264FCZZ | | AG | DX | | C | MC fixing step screw | MC固定段ﾋﾞｽ | | |
| 22 | XRESP50-06000 | | AA | DD | | C | E ring(E5) | Eﾘﾝｸﾞ | | |
| 23 | PSHEP6499FCZZ | | AA | DD | N | C | MC insulation sheet | MC絶縁ｼｰﾄ | | |
| | (Unit) | | | | | | | | | |
| 901 | CHLDZ2271DS51 | | BE | GN | | E | MC unit | MCﾕﾆｯﾄ | | |

## 46 MC ユニット (MC unit)

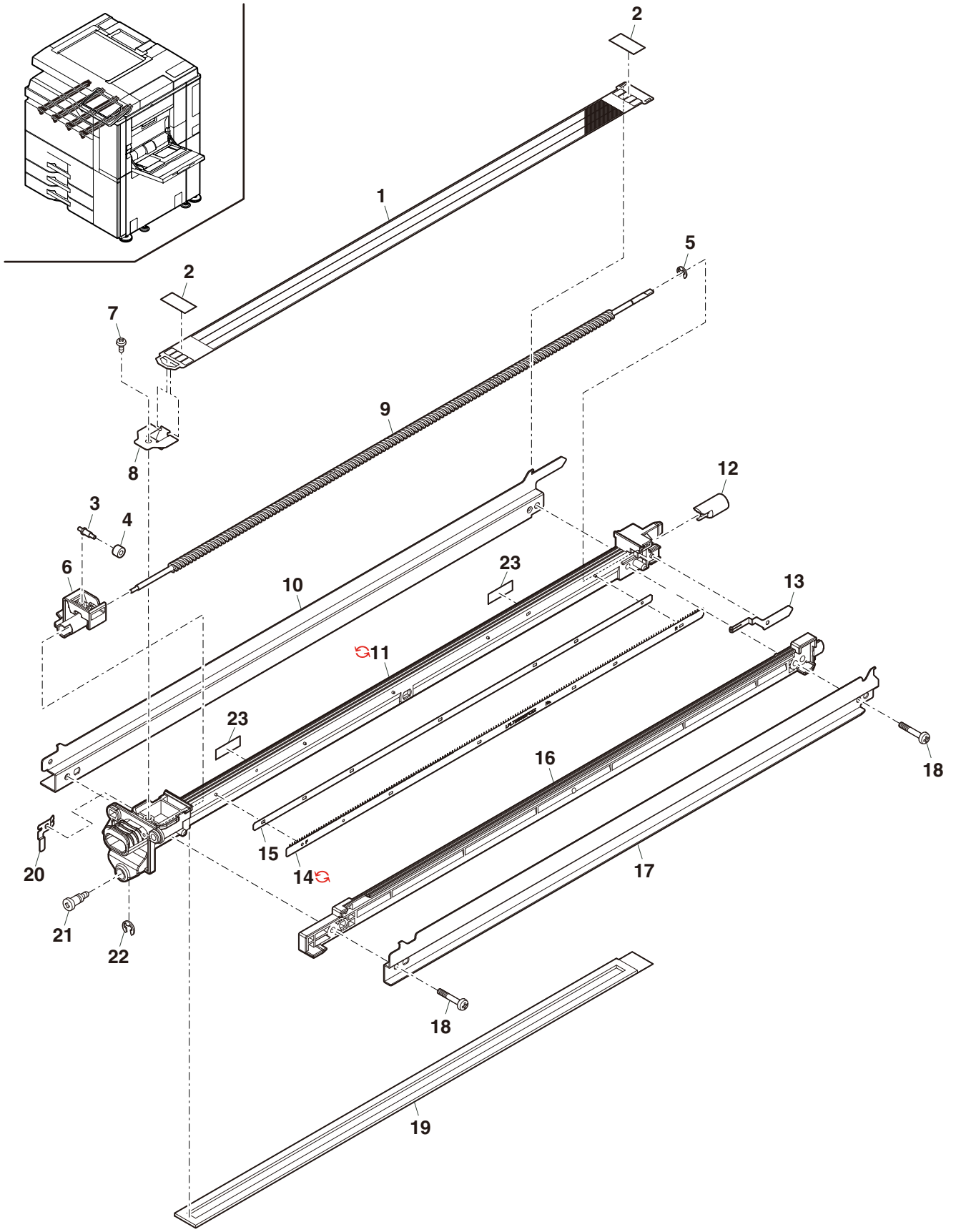


FCP13446

## 47 1 次転写ｸﾘｰﾅｰﾕﾆｯﾄ (1st transfer cleaner unit)

| NO. | PARTS CODE | Inter-change | PRICE RANK Ex. | PRICE RANK Ja. | NEW MARK | PART RANK | DESCRIPTION | | TR No. | Effective time |
|---|---|---|---|---|---|---|---|---|---|---|
| 1 | PPiPP0259FCZZ | | AH | DX | N | C | Transfer waste toner transport pipe | 転写廃ﾄﾅｰ搬送ﾊﾟｲﾌﾟ | | |
| 2 | PCOVP1991FCZZ | | AF | DS | | C | CD cleaner cover | CD ｸﾘｰﾅｰｶﾊﾞｰ | | |
| 3 | PMLT-1464FCZZ | | AC | DJ | | C | CD shutter cushion | CD ｼｬｯﾀｰﾓﾙﾄ | | |
| | PMLT-1464FCZ1 | 3 | AC | DJ | | C | CD shutter cushion | CD ｼｬｯﾀｰﾓﾙﾄ | | Aug/12 R/C |
| 4 | PSHT-0116FCZZ | | AD | DJ | | C | CD waste toner shutter | CD 廃ﾄﾅｰｼｬｯﾀｰ | | |
| 5 | PMLT-1465FCZ1 | | AC | DJ | | C | CD pipe cushion | CD ﾊﾟｲﾌﾟﾓﾙﾄ | | |
| 6 | MSPRC3563FCZ1 | | AC | DJ | | C | CD toner shutter spring | CD ﾄﾅｰｼｬｯﾀｰ ｽﾌﾟﾘﾝｸﾞ | | |
| 7 | XEBS740P10000 | | AA | DD | | C | Screw(4×10) | ﾋﾞｽ | | |
| 8 | NBRGP0746FCZZ | | AQ | EQ | | C | Cleaner bearing | ｸﾘｰﾅｰ軸受 | | |
| 9 | CPLTM8329FC02 | | AK | DX | | C | Transfer CL F plate | 転写CL Fﾌﾟﾚｰﾄ | | |
| 10 | NGERH2239FCZZ | | AD | DJ | N | C | CL Brush idle gear 1 | CL ﾌﾞﾗｼｱｲﾄﾞﾙ ｷﾞﾔ1 | | |
| 11 | NGERH2240FCZZ | | AE | DJ | | C | CL Brush idle gear 2 | CL ﾌﾞﾗｼｱｲﾄﾞﾙ ｷﾞﾔ2 | | |
| 12 | XRESP40-06000 | | AA | DD | | C | E ring(E4) | E ﾘﾝｸﾞ | | |
| 13 | NSRW-0083FCZZ | | AK | DX | N | C | Transfer waste toner transport screw | 転写廃ﾄﾅｰ搬送 ｽｸﾘｭｰ | | |
| 14 | LFRM-1544FCZZ | | AR | EQ | N | C | Cleaner frame | ｸﾘｰﾅｰﾌﾚｰﾑ | | |
| 15 | NBRGP0791FCZZ | | AH | DX | | C | Screw bearing | ｽｸﾘｭｰ軸受 | | |
| 16 | CPLTM8330FC02 | | AK | DX | | C | Transfer CL R plate | 転写 CL Rﾌﾟﾚｰﾄ | | |
| 17 | NGERH2243FCZZ | | AD | DJ | N | C | Waste toner transport screw idle gear | 廃ﾄﾅｰ搬送ｽｸﾘｭｰ ｱｲﾄﾞﾙｷﾞﾔ | | |
| 18 | PSHEZ6410FCZZ | | AF | DS | N | C | Transfer Cleaner seal R | 転写ｸﾘｰﾅｰｼｰﾙ R | | |
| | PSEL-1176FCZZ | 3 | AF | DS | N | C | Transfer Cleaner seal R | 転写ｸﾘｰﾅｰｼｰﾙ R | | Mar/12 |
| 19 | PRNGP0081FCZ1 | | AB | DJ | | C | Resin ring(E4) | 樹脂ﾘﾝｸﾞ | | |
| 20 | NGERH2242FCZZ | | AD | DJ | N | C | Waste toner transport screw drive gear | 廃ﾄﾅｰ搬送ｽｸﾘｭｰ 駆動ｷﾞﾔ | | |
| 21 | LPLTM7093FCZZ | | AC | DJ | | C | M4 plate | M4 ﾌﾟﾚｰﾄ | | |
| 22 | PBRSR0284FCZZ | | | | N | B | Transfer cleaning brush | 転写ｸﾘｰﾆﾝｸﾞ ﾌﾞﾗｼ | | |
| 23 | PMLT-2040FCZZ | | AA | DD | N | C | CL blade horizontal cushion | CL ﾌﾞﾚｰﾄﾞ横ﾓﾙﾄ | | |
| 24 | XRESP30-06000 | | AA | DD | | C | E ring(E3) | E ﾘﾝｸﾞ | | |
| 25 | PSHEZ6409FCZZ | | AF | DS | N | C | Transfer Cleaner seal F | 転写ｸﾘｰﾅｰｼｰﾙ F | | |
| | PSEL-1175FCZZ | 3 | AF | DS | N | C | Transfer Cleaner seal F | 転写ｸﾘｰﾅｰｼｰﾙ F | | Mar/12 |
| 26 | PMLT-2041FCZZ | | AD | DD | N | C | CL blade lower cushion | CL ﾌﾞﾚｰﾄﾞ下ﾓﾙﾄ | | |
| | PMLT-2041FCZ1 | 3 | AD | DD | N | C | CL blade lower cushion | CL ﾌﾞﾚｰﾄﾞ下ﾓﾙﾄ | | Mar/12 |
| 27 | CCLEZ0231FC32 | | BE | GN | N | A | 1st transfer cleaning blade | 1 次転写ｸﾘｰﾆﾝｸﾞ ﾌﾞﾚｰﾄﾞ | | 1st lot |
| 28 | LX-BZ1091FCZZ | | AB | DD | | C | Screw(4×6) | ﾋﾞｽ | | |
| 29 | UCLEZ0232FCZZ | | AL | EB | N | A | 1st transfer cleaning sub blade | 1 次転写ｸﾘｰﾆﾝｸﾞ ｻﾌﾞﾌﾞﾚｰﾄﾞ | | |
| 30 | NGERH2241FCZZ | | AE | DJ | | C | CL Brush drive gear | CL ﾌﾞﾗｼ駆動ｷﾞﾔ | | |
| 31 | PMLT-2090FCZZ | | AB | DD | N | C | F cover scattering prevention cushion | F ｶﾊﾞｰ飛散防止 ﾓﾙﾄ | | |
| 32 | N NBRGP1001FCZZ | 4 | AD | DJ | N | C | 1st Brush conductive bearing | 1 次ﾌﾞﾗｼ導電 軸受 | | Feb/12 |
| 33 | N QEARP0355FCZZ | 4 | AD | DD | N | C | 1st Brush earth plate | 1 次ﾌﾞﾗｼｱｰｽ板 | | Feb/12 |
| 34 | PMLT-2121FCZZ | | AA | DD | N | C | 1st cleaner side cushion | 1 次ｸﾘｰﾅｰ ｻｲﾄﾞﾓﾙﾄ | | 1st lot |
| 35 | C LPLTM8559FCZZ | - | AG | DX | N | A | Cleaner flame reinforce plate | ｸﾘｰﾅｰﾌﾚｰﾑ 補強板 | | 1st lot |
| 36 | C XEBS730P12000 | - | AC | DD | | C | Screw(3×12) | ﾋﾞｽ | | 1st lot |
| | | | | | | | | | | |
| | (Unit) | | | | | | | | | |
| 901 | CFRM-1544DS51 | | BE | GN | N | E | 1st transfer cleaner unit | 1 次転写ｸﾘｰﾅｰ ﾕﾆｯﾄ | | |